This is a digital copy of a book that was preserved for generations on library shelves before it was carefully scanned by Google as part of a project to make the world's books discoverable online.

It has survived long enough for the copyright to expire and the book to enter the public domain. A public domain book is one that was never subject to copyright or whose legal copyright term has expired. Whether a book is in the public domain may vary country to country. Public domain books are our gateways to the past, representing a wealth of history, culture and knowledge that's often difficult to discover.

Marks, notations and other marginalia present in the original volume will appear in this file - a reminder of this book's long journey from the publisher to a library and finally to you.

Usage guidelines

Google is proud to partner with libraries to digitize public domain materials and make them widely accessible. Public domain books belong to the public and we are merely their custodians. Nevertheless, this work is expensive, so in order to keep providing this resource, we have taken steps to prevent abuse by commercial parties, including placing technical restrictions on automated querying.

We also ask that you:

+ *Make non-commercial use of the files* We designed Google Book Search for use by individuals, and we request that you use these files for personal, non-commercial purposes.
+ *Refrain from automated querying* Do not send automated queries of any sort to Google's system: If you are conducting research on machine translation, optical character recognition or other areas where access to a large amount of text is helpful, please contact us. We encourage the use of public domain materials for these purposes and may be able to help.
+ *Maintain attribution* The Google "watermark" you see on each file is essential for informing people about this project and helping them find additional materials through Google Book Search. Please do not remove it.
+ *Keep it legal* Whatever your use, remember that you are responsible for ensuring that what you are doing is legal. Do not assume that just because we believe a book is in the public domain for users in the United States, that the work is also in the public domain for users in other countries. Whether a book is still in copyright varies from country to country, and we can't offer guidance on whether any specific use of any specific book is allowed. Please do not assume that a book's appearance in Google Book Search means it can be used in any manner anywhere in the world. Copyright infringement liability can be quite severe.

About Google Book Search

Google's mission is to organize the world's information and to make it universally accessible and useful. Google Book Search helps readers discover the world's books while helping authors and publishers reach new audiences. You can search through the full text of this book on the web at `http://books.google.com/`

NYPL RESEARCH LIBRARIES
3 3433 06634373 6

VDA
Institut

THE NEW YORK
PUBLIC LIBRARY
ASTOR, LENOX AND
TILDEN FOUNDATIONS

TRANSACTIONS

OF THE

INSTITUTION OF CIVIL ENGINEERS

OF

IRELAND.

VOL. VIII. PART II.

1866-67

DUBLIN:
JOHN FALCONER, 53, UPPER SACKVILLE-STREET,
PRINTER TO HER MAJESTY'S STATIONERY OFFICE.

1868.

[March 14th, 1866.]

On Some *of the* Materials Used *for* Construction *in* Madras Presidency. By T. H. Going, F.L.M.

TIMBER.

One of the most vexed questions of railway making in India has been the supply of timber for sleepers.

It is exceedingly difficult to procure woods of good quality which can be cut up into scantlings of the dimensions required (10 ft.×10″×5″). More than forty different varieties of wood have been sanctioned by the Madras government as suitable for railway sleepers, and in some respects many of these are excellent, being for the most part hard and close-grained; some of them to such a degree as to resist the attacks of the white ant.

Unfortunately, however, they abound in knots, shakes and crookedness, and their very hardness, though in one respect a desirable quality, renders them most difficult to work into shape.

Another great cause of the failure of Indian jungle sleepers has been the injudicious method of felling the timber, totally irrespective of the season when the least sap is in circulation. This is principally due to the fact that the railway companies did not, in the early stages of their operations, take care to lay up a stock of well-selected timber; so that in practice it has become necessary to use such sleepers as first came to hand.

It is true that none of the objections enumerated against jungle woods can be urged against the use of teak, in which there is a large trade on the Malabar coast. The chief value of this timber consists in its freedom from knots and shakes, the readiness with which it is worked up by the carpenter, and its exemption from dry rot. This latter quality is owing to the judicious method adopted by the teak merchants in

felling the trees. In the month of October they are sawn across the roots as they stand, and allowed to remain some time to absorb all the sap.

After being felled, they lie on the ground till thoroughly seasoned. It is a slow-growing tree, and requires to reach the age of 80 or 100 years before attaining the size of six or eight feet in girth. The *cost* of teak, however, precludes it from use in sleepers, being about four shillings per cubic foot in the log at Madras. This would make the cost of a teak sleeper about thirteen shillings.

Creasoted pine sleepers had been sent out from England at the cost of about 8s. 6d. each. Pine in the unprepared state is exceedingly perishable in India; creasoted, it has been found to resist the effects of the climate very well. The author had occasion to remove some sleepers of this material for the purpose of slewing the line over a bridge for repairs in the course of last year, and found them as sound as when first laid down—nearly five years previously. These were of rectangular section. There were some of triangular section taken out at the same time, which were found, for the most part, decayed. These latter were the first which had been sent to the country, and, it is probable, were not perfectly impregnated. The creasote appeared to have quite evaporated, whereas in those of rectangular section, it was still strong.

Experiment was made of an Australian wood named jarra, which is very dense, weighing 64 lb. to the cubic foot. This, as regards endurance, proved satisfactory, but its high cost and liability to shakes, rendered it unsuitable.

The Madras Railway Company are at present making experiment of the Boucherie process of impregnating timber. This consists in applying a moderate pressure to one end only of the sap tubes of the tree, the effect of which is to expel the sap by the preserving liquid, which takes its place. It is

founded on the fact that no connexion exists between the sap tubes laterally. The injection is the more rapid in proportion, as the tree contains more sap, and is the more recently felled; and some kinds of timber are altogether impenetrable to the solution. The solution used is sulphate of copper and water, mixed in the proportion of 1 to 100 by weight. The specific gravity of water at 60°, being 1000, if 1 per cent. sulphate of copper be added, the specific gravity will be 1006. Hence the hydrometer is used to maintain the solution in the proper proportion. Prussiate of potash is applied as a test to determine when the tree has been saturated.

As this experiment has only been recently initiated, its value cannot be at present reported on.

Since the substitution of cast-iron sleepers on the Madras Railway, the question of timber has, indeed, lost much of its importance. Timber sleepers are now only used on about 140 miles of the western portion of the south-west line, where the steady supply of a superior quality of timber can be depended on. Where the cast-iron (or pot) sleeper is laid, the only item of timber used in the permanent way is that for the keys, and teak is found to be the best wood for the purpose. It is also the cheapest, because the refuse timber of the locomotive workshops, which is for the most part of well-seasoned teak, is utilized by cutting into keys.

Large quantities of pressed elm and oak keys and trenails from England have been used, but native woods are better and more economical. There are many jungle woods of intense hardness and toughness, which, though they cannot be procured sufficiently sound and shapely for sleepers, are yet capable of supplying keys and trenails. These have been found to endure far longer than oak or elm. The author was himself witness to an instance where, in a siding at Arconum station, a passing engine burst out the rails, and dropped through. On examining the trenails, they were found to be

shaved off flush with the surface of the sleepers, presenting the fracture of charcoal. These were English pressed oak trenails, and had not been driven longer than ten months.

In the construction of roofs, doors, windows, &c., and in carriages and waggons, teak is the wood principally used.

IRON.

The serious objections to the use of timber sleepers on the Madras Railway led to the introduction of the cast iron one. The variety used is that known as Greaves' patent. Each sleeper weighs 84lbs., and covers an area of 2·2 square feet. Six pair of pots are laid to a 20 foot rail of 75lbs. to the yard. The space between the two central pair of pots is 4 feet, and the spaces between the others diminish towards the ends of the rails. Each pair of pots is connected by a tie-bar of wrought-iron, secured by Cottars and Gibs. The rail is of the double headed pattern, and is fish-jointed.

The S.W. line of the Madras Railway, which was originally all laid with wooden sleepers, is being gradually renewed by cast-iron ones, except that portion before alluded to, on the west coast. The N.W. line has been, from the commencement laid entirely with pots, and the advantage thus obtained will appear by comparing the cost of maintaining the two lines, as shown by the last report, dated March 31st, 1865.

Thus—

S.W. line per mile per annum,			£165
N.W. line	,,	,,	73

It appears that in Madras Presidency, the use of cast-iron sleepers is productive of great economy in the maintenance of line, and according to the testimony of the locomotive superintendent, this is further experienced in the diminished wear and tear of rolling stock. It does not, however, follow from this, that pot-sleepers are universally applicable, even in India. The abundance of good sand ballast procurable along

the Madras Railway is the chief reason of the success there of this kind of permanent way. In Bengal such material is not available, and baked ballast has to be substituted. A free, open ballast is absolutely necessary to the success of pot-sleepers, unless, indeed, it be in a climate such as that of Chili or Egypt, where rain is the exception, as under these circumstances there is no danger of the ballast caking.

In Bengal objections have been raised against this kind of sleeper, on the score of its liability to fracture. This is entirely due to the nature of the ballast. The author has known a few instances of fractured pot-sleepers having been removed from the permanent way of the Madras Railway, but in each case this was due either to the pot having rested on a large stone among the ballast, or else to the bottom of a cutting not having been fully taken out. On that portion of the line originally laid with pot-sleepers in 1860, there has been practically no renewal of sleepers required, and to all present appearance they bid fair to outlast the rail There is one precaution, however, which has been found necessary on the Madras Railway, and that is, to avoid laying pot-sleepers over the crowns of arches, because, owing to the small bearing surface compared to the ordinary wooden sleeper, the pressure is concentrated, and unless there be an unusually large space allowed for the ballast between the arch and the base of the permanent way, the arch is liable to be shaken.

Iron is largely used in the Madras Railway, in the superstructure of bridges. The form of girder used is the double flange plate beam, and it is applied to spans from 10 feet to 70 feet.

The larger bridges are usually divided by piers into openings of 70 feet, 5 from centre to centre of pier, and the girders are made continuous over every three piers, being fastened to the middle one, and movable on rollers at the two ends. Each 140 ft. length thus spanning two openings, is composed

of three pieces for convenience of transport, and these three pieces are riveted together at the bridge site, previous to rolling the girder into its position. The centre piece is 36 feet long, and its centre rests on the middle pier. The other two pieces are each 52 feet long. The riveted joints are by this arrangement placed at the point of contrary flexure calculated for the mean condition of the load.

The method of rolling a pair of girders to their place on the pier is thus:—After being braced together, they are lifted by screw-jacks and allowed to rest on rollers fixed on the abutments. Rollers are also fixed on each of the piers, and rails on the flat are attached to the under sides of the girders. Motion is given by means of a crab winch placed on the girders, and strongly fastened to them, while the tackle is attached to a forward pier.

A gang of twenty moplahs, from Malabar, was employed in rolling some of the large girders on the north-west line in the early part of the past year, and were able to move a pair of girders forward in the manner described, about 300 feet in a day.

Mitchell's wrought-iron screw piles are used to a considerable extent for bridge piers in crossing the rivers of the N.W. line, which, for the most part, have deep sand beds. They are the means of saving much trouble and cost in foundations.

STONE.

Amongst Madras building materials may be classed laterite, which is found of various ages in most parts of Southern India; some quite recent, indeed, at present in process of for mation from peroxydation of magnetic iron; most likely also, in sub-marine localities, as many of the rivers carry down immense quantities of magnetic iron sand.

The enormous quantity of hornblende minerals is a very

peculiar feature in South India. The author has observed, on the Neilgherry Hills, instances where, from the weakening of hornblende rock, a laterite was being formed *in situ* as a coating over the undecomposed portion of the rock, while the lime of the hornblende was carried away in a soluble salt, and afterwards deposited as an incrustation. The great abundance of concretionary limestone (or kunkur) in this part of the world is probably due to the weathering of these hornblende rocks.

Beds of laterite, several hundred feet thick, occur largely on the western side of the Peninsula, and are very extensively quarried for house and bridge building, and for road ballast. It is not, however, by any means a good building stone, being very porous, and rapidly destroyed by exposure to the weather.

The most general stone, and that principally used for building purposes in Madras Presidency, is gneiss. It dresses well, and is easily quarried. The ordinary method of doing this is by burning logs of wood on the surface. The upper bed thus buckles from expansion, and becomes detached from that beneath; wedges are then driven in, and the bed of stone is broken into convenient pieces by throwing trap boulders forcibly down on it. When, however, stones of great size are required, they are quarried by drilling square holes in line at short intervals, and inserting wedges, which are struck reiterated blows by a hammer.

The walls of Mosques, Pagodas, &c., are built of long, thin stones, closely jointed together, and without cement, many of the stones being cut to fit most accurately the natural inequalities of the contiguous ones. The old fort-walls, and those enclosing temples and such places, are generally built with a double batter, each face being composed of thin stones of very great length, forming a mere shell to the body of the wall, which consists of loose fragments of brick and stone, with

occasional bonds. These face stones are sometimes as long as forty feet, while perhaps not more than three feet deep and one and a half ft. thick.

The larger proportion of the bridges, &c., of the Madras Railway are constructed of stone, gneiss being the variety most commonly met with on the south-western line. The north-west line passes through a country, the prevailing feature of which is a succession of quartzite hills, cut up with trap dykes, while in the intervening valleys are found alternating, clay slates, shales, and impure limestones. These latter, especially the blue variety common in the Cuddapah district, afford excellent building material.

The style of masonry adopted is coursed rubble, with cut quoins. The larger bridges are generally constructed with segmental arches of thirty feet span, springing from piers not calculated to resist the horizontal thrust. As the engineer has to make his own centring, and this, for a bridge of many spans, would add considerably to the cost, were sufficient centres made to build all the arches simultaneously, it is usual to commence such a bridge with not more than two or three sets of centrings; then, when the first arch is finished, to move its centres forward, and so on till all are completed. The centres are generally eased immediately after keying the arch, and as mortar sets rapidly in this climate, they should be struck within three days.

In the bridge across the Naggery River, of 13 forty-feet spans, some of the piers are sunk on a curb foundation. The process was described in a paper previously read before this Institution.

BRICKS.

The use of bricks in constructing bridges and station-houses on the Madras Railway has been avoided as much as possible. In some instances, however, the distance of a good

quarry renders it desirable, for economical reasons, to employ bricks, where suitable earth is procurable, and firewood to burn them not too far off. Contractors are always to be found ready to supply them; but contract bricks are seldom to be had of good quality, being underburned. On the railway, therefore, the engineers manufacture their own bricks. The mode of working is thus:—The surface of the selected ground is hoed off, and the clay beneath dug up to a depth of some inches. This is then saturated with water, and allowed to soak for about twelve hours, after which it is trampled by men. Having been thus treated for an hour or two during four or five successive days, it is fit for moulding.

This is sometimes done on a smooth level piece of ground, but usually on a table which has a stock screwed to it, on which the mould is placed, having been previously dipped in water. The moulder takes up a lump of clay, and throws it forcibly into the mould, pressing it well down. A piece of lath is then passed over the top, and cuts off the superfluous clay. A little sand is then shaken on, and the brick turned out on a pallet. In this form an attendant takes them off in a barrow, and places them on the prepared floor of the drying shed. When dry enough to bear handling, they are conveyed to other drying sheds, and built up into open clamps to allow the wind to have free access through them.

It requires six or seven days to make them dry enough for burning. This is done in clamps, not kilns. One foot of firewood is used between every four courses of bricks. The bricks are packed loosely. When the clamp has been built it is plastered all over with clay, leaving only a vent on top, which is, however, stopped when the fire has been kindled. A clamp of bricks thus burned, containing 100,000, will afford about 60,000 useful bricks. The size of the brick used on the railway is $9'' \times 4\frac{1}{2}'' \times 3''$, and weighs about $7\frac{1}{4}$ lbs. If good fresh cut timber be used in the burning, each brick

will use about $1\frac{1}{2}$ lbs. of fuel. Timber is sold in India at so much per cart-load of 1,000 lbs., and the wood of the tamarind tree is the best for burning. The cost of bricks is, of course, very much dependent on the price of firewood, and this on the distance it has to be carted. The author made about six million bricks in one of his brickfields, and the cost, when distributed over those actually used in bridges and stations, amounted to something less than 10 Rupees, or £1 per 1,000. The firewood in this instance was carted six miles, and cost 5s. per 1,000 lbs. Had a larger quantity been made, the cost would have been considerably reduced, as the same sheds and plant would have sufficed.

TILES.

Tiles are very largely used in India for roofing, not, however, in the ordinary way, as practised in England. The favourite roof in Madras is that called the terraced one, and is admirably adapted for the purpose designed—viz., coolness. It is thus constructed:—The joists are placed at distances apart of 1′ 3″ to 1′ 6″, centre to centre. On these a course of small bricks (5″ × 3″ × 1″) is placed diagonally on edge, and set in fine mortar; over this comes a coat of 3″ of jelly, or brick broken into fragments and mixed with mortar; then a course of small tiles on the flat, and finally two coats of plastering, finished off with one of exceedingly fine plaster, the surface of which is polished, during the process of drying, by rubbing with soap-stone. The course of tiles is, however, frequently dispensed with. A slope of $\frac{1}{4}$″ to the foot is given, from the centre to the outside edges, in laying on the beams and joists, to allow water to run off quickly. A low parapet wall is built all round, with openings for the water spouts.

It is of great importance in this work, and equally so in all brickwork, that the bricks should be thoroughly soaked in

water before laying, as the Indian brick is much more absorbent than the English one, imbibing, when placed in water, about one-fifth of its own weight, which is more than double what a good English brick should do.

The principal rooms of all the Madras Railway Stations are roofed in the manner described, and when carefully constructed it is perhaps the best roof for the climate. The principal objection to it is its liability to crack. Cracks are, however, pretty successfully repaired by caulking with tar and canvas.

LIME.

Carbonate of lime, in various forms, is met with in most parts of Madras Presidency. In the interior of the country it is most abundant in small nodules disseminated through the soil, sometimes sparsely, but frequently in large accumulations, whence it is excavated by digging pits, as for gravel. In this form it is generally hydraulic, though in a low degree. The kiln most in use is of an oblong form on plan, and is built of bricks set in clay; an arch runs through it from end to end, at a height of about four feet from the ground, and the top of the arch is covered with a grating of brick on edge. The fuel used is charcoal, and it is intimately mixed with the nodules of limestone. On the coast lime is made from the shells of fish. At Madras the shells used for the purpose are found some feet below the surface in low lands along the coast. These are the shells of species existing in the adjacent waters at the present time. The lime made from them, being very pure, will bear three parts sand to one of lime in mixing for mortar; while two to one is found a good proportion with that made from the nodular limestone.

It is usual in India, when making mortar, to mix with the water a certain proportion of jaghery, a coarse kind of sugar made from the juice of the Palmyra palm. This appears to

have some influence in making it set hard, but I cannot answer for its effect on the endurance of mortar.

Masons in India are accustomed to temper their mortar very thin, and there is good reason for this, as the extreme dryness of the material and the rapid evaporation would reduce it to powder if tempered to the degree of stiffness usual in England.

[Read April 11, 1866.]

Description *of* Oil Axle-box *and* Outside Coupling Rod *for* Locomotives, *with the* Bearings Formed *in* Single Rings. By A. M'Donnell, Member.

The axle-box I have here for your inspection (Fig. 5, Plate VII.), is constructed for using oil on locomotive axle journals, being an adaptation of Mr. Blackburne's patent oil holders. The oil chamber (*a*) is placed above the axle, and has a small tube (*b*) passing through the centre of it. Across the top of this tube a small piece of wire is soldered, on which is hung a small syphon, which is made by fastening a strip of fine flannel about an eighth of an inch wide, and two or three inches long, to a strip of tin of the same size. This syphon is bent in the middle, so that it may hang on the wire, the two ends then hanging down the tube. On the lower side of the lid of the box a piece of thick flannel (*a*) is fastened so as to press lightly on the top of the tube, and therefore on the top of the syphon where it hangs over the wire. When the engine begins to move, the oil is jerked up, so that the flannel (*a*) on the bottom of the lid is saturated with oil, and the

syphon draws it from the flannel. The oil drops from the ends of the syphon, and is conducted through oil holes placed on the sides of the bearings to two pieces of flannel (*d*) which are placed in two recesses in the sides, so that the oil is distributed over the journal. I have found this arrangement for using oil extremely economical. The oil is only used while the engine is running; the quantity of oil used can be regulated by cutting the flannel, which forms the syphon, to a proper width. The driver is saved the constant trouble of oiling the axles, as the oil-chamber contains enough oil to run several hundred miles, and economy does not cause him trouble.

The outside coupling-rod (Fig. 6, Plate VI.), the end of which is shown here, is extremely simple, and has been used lately a good deal on some English railways. The end of the rod is bored out, and a cast-iron ring is forced into it. The inside of this cast-iron ring is recessed and filled with white metal to form the bearing. When the bearing becomes slack, the ring is filled again with white metal. I have found them to work extremely well, while they are simpler and cheaper than the ordinary kind.

[Read April 11, 1866.]

A New Method *of* Finding *the* Angles *between the* Face Joints *and* Coursing Spirals *on the* Soffit *in a* Skew Arch. By Edward Townsend, M.A., Professor of Civil Engineering, Queen's College, Galway.

The methods which have been given in works on Engineering for finding these angles which are necessary for cutting the voussoirs in a skew arch, are rather long and cumbrous, and attended with much trouble and difficulty in their practical application. I was, therefore, led to search for an easy practical method for working this problem, and arrived at the following solution, which is so simple in its application as to lie within the scope of the most ordinary draughtsman.

The solution of this problem will be easily understood by referring to the annexed diagram (Plate VI., Fig. 1), which is an isometrical sketch of part of an oblique arch—*abdc* is part of the face or elevation, and *efdc* a spiral bed intersecting the face in the joint *cd*. The problem, then, is to find the angle between *cd* and the tangent to the spiral *ce* at the point *c*. I need scarcely observe that the intersection *cd* is a curve, but the curvature is so small that in practice without error, it is regarded as a right line.

In the plane of the face draw *ck* parallel to *ao*, the semi-axis major of the elevation, and from the point *k*, where it meets the semi-axis minor, draw *hk* parallel to the axis of the cylinder *xo*. Through *c* draw *ch* perpendicular to *kh*, and *cx* perpendicular to *xo*. The production of this line will lie on the spiral bed.

Let *l* be the "focus," *i.e.*, the point where the face joints meet; through *l* draw *ln* parallel to *xo* to meet *hx* in *n*, *lp* parallel to the element of the extradosal spiral at *d*, and *lm* parallel to the element of the intradosal spiral at *c*; join the

point where lp meets cx with n, produce dc to l, the angle required is now contained by the lines cl and lm.

Take the unit sphere Fig. (2) round o as centre, through o draw ao parallel to cp, bo parallel to lp, do parallel to lm, and co parallel to cl. Now, its easily seen that cp is perpendicular to the plane lpn, and that the angle pnl is right.

Calling doc the angle required ψ

ck . . . x

pln . . . ϕ

mln . . . δ

ckh (angle of obliquity) θ

cl . . . l

We have cbd being a right angle spherical triangle.

$$\cos cd = \cos cb . \cos bd$$

$$\text{or } \cos \psi = \cos (\phi - \delta) \cos bc$$

$$\text{now } \cos b'c = \frac{pl}{l} = \frac{nl}{l \cos \phi} = \frac{kh}{l \cos \phi} = \frac{x \cos \theta}{l \cos \phi}$$

$$\therefore \cos \psi = \frac{\cos \theta}{\cos \phi} \cos (\phi - \delta) \frac{x}{l}$$

In practice $(\phi - \delta)$ is a very small angle, being the difference between the angles which the extradosal and intradosal spirals make with the axis of the cylinder—its cosine is generally a decimal, with three nines after it. We may, therefore, make $\cos (\phi - \delta) = 1$, and there results:—

$$\cos \psi = \frac{\cos \theta}{\cos \phi} \frac{x}{l}$$

Assume $x' = \mathrm{K}\, x$

Where $\mathrm{K} = \frac{\cos \theta}{\cos \phi}$ the locus of the point x' is an ellipse whose axis minor is the same as that of the ellipse of elevation, and whose semi-axis major is thus easily found. Take any point o' draw $o'a'$ (Fig. 4) equal ao semi-axis major of ellipse

of elevation; make $a'ob' = \theta$ from a' drop a perpendicular $a'b'$ on ob'; make $b'o's' = \phi$; then $o's'$ is the length required.

"Result"—In Fig. 3 let *acr* be the elevation, and *str* the ellipse, whose axes we have just found. Suppose now that the angle between the face joint and coursing spiral is required at the point *c*, draw *ck* parallel to *ao* to meet the axis minor; join *c* with the "focus" *l* from the point *t*, where *ck* meets the second ellipse; inflect $tv = cl$, then *ktv* is the angle required.

Hence we see the great facility with which the angles corresponding to the face joints may be constructed. Each angle, the ellipses being the same, requiring only three lines corresponding to those in Fig. 3.

[Read December 12, 1866.]

Description *of* Captain Coles' (R.N.), Turrets, *as* Fitted *on* Board H.M. Ship "Royal Sovereign."—By J. Bailey, Member.

It is not my intention this evening to offer any opinions or provoke discussion on that interesting and important question of "Turrets" *versus* "Broadside" or "Battery" ships, but simply to lay before the members of this institution, as plainly as I can, the general arrangement and details adopted by Captain Coles, R.N., in the construction of the "cupolas" or "turrets" on board H.M.S. "Royal Sovereign."

The "Royal Sovereign" carries four turrets," mounting in all five 300 lb. Armstrong guns—two in the forward and one in each of the after "turrets." We will take this evening the forward or twin-gun "turret," which is 22′ 9″ in diameter outside, and 18′ 9″ inside (Fig. 1, Plate VII). First, we have a massive framework of wood constructed on the main deck, and supported by the deck beams and wrought iron columns. The centre is formed of two large rectangular blocks of English

oak, making a square of 6′ 3″ × 2′ 6″ deep, with a round hole in the centre twenty-six inches in diameter. Immediately under this is placed two balks of English oak 18″ × 15″ × 30 feet in length, running fore and aft, and bolted down to the deck beams; on this, segments of English oak are placed, cut to an inner radius of nine feet, and forming a ring of 9′ 6″ outside diameter, which is firmly bolted to the fore and aft beams just mentioned; round the outside of this ring three bands of American oak are bent, each 12 inches deep × 4 inches in thickness, and bolted to the segment forming the inner ring by 1″ bolts. Six arms or spokes radiating from the centre, each 18″ × 12″, like the centre and inner ring, are made of English oak; on this substantial and massive framework is bolted a turned cast-iron roller path. In the centre is a hollow tube of wrought iron, 2′ 2″ outside diameter, three inches in thickness, and 7′ 3″ in length, forming the pivot on which the "turret" revolves, and acts as a safe communication with the magazine below. A large casting, which forms the centre, round which a live wrought iron ring lined with brass revolves, is placed round this pivot, and sits upon the wooden framework bolted through to a somewhat similar casting below, which is supported by a forked wrought iron column resting on the keelson. We now come to the turn-table or platform on which the turret is built. It is a large disc of woodwork 24′ 8″ in diameter and 12″ in thickness, built of oak slabs 14″ × 6″, bolted together, the top layer being placed at right angles to the bottom one. Near the outside the thickness is increased 4 inches by a circle of oak 3′ 9″ in width × 6″ in thickness let into the other portion 2 inches. On the underside of this platform is fixed the cast iron upper rolling path, fastened by 1″ bolts which pass through the frame to rings of wrought iron 9″ × ¾″ let into the top to which they are secured by nuts. In the centre of this table is fixed a large kind of

angle iron ring of cast iron, with the flange on the bottom side, and bolted through in the same manner as the rolling path. This casting is bored out, and a brass bush let in $\frac{3}{4}''$ in thickness $\times$ 15″ in depth, which forms the moving rubbing surface round the axes. Between this casting and the lower one are arranged twelve brass conical rollers, $5\frac{1}{2}''$ in diameter at their largest part, and $5\frac{1}{2}''$ wide, supporting the centre weight of the turret. These rollers are placed in a live ring of brass, as shown in Fig. 5, Plate VIII.; the pins round which they revolve are $1\frac{1}{4}$ inches in diameter, and screwed into the inner part of the brass ring with a jamb-nut screwed up to prevent the pin turning. A $\frac{7}{8}''$ washer is then put on, and segments of wrought iron $4'' \times \frac{3}{4}''$ are fastened over the whole thing by 1″ square-headed wood screws; the outside nuts of the roller pins are tightened against these segments. The centre line through the inner rollers is 5″ above the centre line through the outer ones, which are thirty-six in number, made of cast iron, and turned conical, the largest diameter being $18'' \times 9''$ wide; they are cast H sections, the boss is bored out, and a brass bush fitted. The framework in which these wheels revolve (Fig. 3, Plate VIII.) is made of an inner and outer ring of wrought iron, each $6'' \times \frac{3}{4}''$. The inside diameter of the inner ring is 19′ 2″, and the outside diameter of the outer ring is $21' \, 3\frac{1}{2}''$. Like the outside ring of the centre rolling frame, these rings are made in short segments with joint plates on the inside, each fastened by four $\frac{3}{4}''$ bolts, the two outside ones being long enough to pass through both rings, with a nut at either end; round these long bolts is a piece of $1\frac{1}{2}''$ gun-barrel tube, which acts as a stay or distance piece, to which the rings are screwed home. There are 36 segments to each ring. The radius rods are 2″ in diameter, increased to $2\frac{1}{4}''$ at the ends. The inner end is screwed into the live ring before described with a jamb nut on the outside; the opposite end passes through the roller and large rings, with

two jamb nuts on the inside and one nut, with a pin through it, on the outside.

On this turn-table is built the "turret," a little eccentric to the platform, that is to say, the centre of "turret" is 9″ from the centre of the platform, and is formed of 30 upright frames made of T irons, angle irons, and plates. The T irons which form the inside circle are 6″ × 10″ × ½″. The plates on the outside are 10″ × ½″, with an angle iron riveted on either side 3″ × 3″ × ½″. The T irons extend from the platform to the top of the "turret," a height of 9′ 6″, whereas the ½″ plates and angle irons only extend 3′ 7″ in height, and are then brought round to form the support for the woodwork and armour plating, as shown in Fig. 4, Plate VIII. Between the vertical T irons, and beginning at 3′ 7″ from the platform, are nicely fitted balks of teak 18″ × 10″ × 6′ in height; round this and let in flush with the outside of the teak, are systems of diagonal bracing or trellis work (Fig. 8, Plate VIII.), with one hoop top and bottom 6″ × ¾″, which is also the scantling of the diagonal bars. Over this is built another ring of teak balks 18″ × 10″ × 6′, and on the outside of this is the armour plating, consisting of twenty plates 5′ 4″ × 3′ 6″ × 5½″ in thickness, secured to the framework of wood and iron by four 2″ countersunk galvanized bolts to each plate, passing through to the inner lining, consisting of ½″ plate irons. In addition to this lining there are two wrought-iron rings in the inside, through which the bolts pass, and to which they are secured by an ordinary nut. The upper hoop is 14″ deep × 2″ in thickness, and the lower one 6″ wide × ¾″ in thickness. There is a double thickness of armour plating 12 feet long on the porthole side of the "turret," the inner plate being 4½ inches in thickness, making a total thickness of 10 inches solid plating. The roof is formed of wrought-iron rolled beams, something like a double-headed rail, except that the top flange is an inch wider than the bottom one, the top being 3¾″, and the bottom 2¾″. These beams

are $4\frac{5}{8}''$ deep, weighing 15 lbs. to the foot-run, or 45 lbs. to the yard. They are placed 2″ apart, and pass through the woodwork resting on the armour plates; these are covered with 1″ wrought-iron plates, bolted to them, as shown in Fig. 4 There are also side laps about every three feet, which are bolted to the armour plates. There is an opening above each gun 20″ in diameter and 9″ deep, packed round with wood, covered with plating; these are merely light holes. There are also two slits over each gun 4 feet long by about 8 inches wide, for the "captain" of the gun to take his aim through. There are two cowl pipes for ventilating each "turret." The short standards with hand-rails are used for stowing the hammocks in, while the long ones merely serve as a hand-rail for the look-out. The portholes are $20'' \times 3$ feet, half round top and bottom, and lined in the inside with plate-iron $\frac{3}{4}''$ in thickness.

We now come to the turning gear, which consists of four winch handles and gearing, working two vertical shafts, one on each side of the cupola, $2\frac{1}{2}''$ in diameter. Two of these handles work inside the "turret," the other two on the outside. As they are all four alike, I need describe only one, which consists of a common winch handle (Fig. 7, Plate VIII.) 15″ radius, attached to a spur pinion 10″ in diameter, $1\frac{1}{2}''$ pitch of teeth, $3\frac{3}{4}''$ breadth of same, 21 in number. This pinion works into a spur-wheel 30″·4 in diameter, $1\frac{1}{2}''$ pitch of teeth, $3\frac{3}{4}''$ breadth of same, 63 in number. To this is attached a bevil pinion $6'' \times 1\frac{3}{4}'' \times 4'' \times 11$ teeth, working into a bevil wheel $18'' \times 1\frac{3}{4}'' \times 4'' \times 33$ teeth. This wheel gives motion to the upright shaft, to the end of which is fixed a spur-pinion $10'' \times 2\frac{1}{4}'' \times 6'' \times 14$ teeth, working into the large wheel bolted to the framework, the size of which is $22' \times 2\frac{1}{4}'' \times 6'' \times 371$ teeth.

The mechanical advantage gained by the gearing up to the periphery of the pinion which works into the rack = 27 to 1.

If we suppose the whole weight of the "cupola" and guns (140 tons) to be concentrated on a circle of 15 feet in diameter, we have:—

$$\frac{30 \times 30{\cdot}4 \times 18 \times 264}{10 \times 6 \times 10 \times 180} = 40.1 \text{ to } 1.$$

Eight men are the full compliment for working the gearing, four inside and four outside the "turret," the speed = 1 revolution per minute. Four men can work it, but, of course, they take double the time.

In addition to the four winches just described, there is what is termed the deck turning gear (Figs. 4 and 6, Plate VIII.), consisting of two winch handles, each 15″ radius, working a bevil pinion $11'' \cdot 1 \times 1\frac{3}{4}'' \times 5'' \times 20$ teeth working into a bevil wheel $32'' \cdot 25 \times 1\frac{3}{4}'' \times 5'' \times 58$ teeth. At the other end of the shaft to which this wheel is attached is a face pinion $10'' \times 2\frac{1}{4} \times 6'' \times 14''$ teeth working into face rack on "turret" $24' 6'' \times 2\frac{1}{4}'' \times 6'' \times 412$ teeth mechanical advantage gained by this gearing from the winch handle up to the periphery of the pinion which works into the rack = 8·7 to 1. But, assuming as before, that the weight is concentrated in a circle 15 feet diameter, we have—

$$\frac{30 \times 32{\cdot}25 \times 294}{11{\cdot}1 \times 10 \times 180} = 14{\cdot}2 \text{ to } 1.$$

There are three small crab winches (Fig. 2, Plate VIII.), attached to the revolving platform, two of which are used for working the guns and one for lifting the shot.

There is a clear space of 3″ all round between the "turret" and the well or hole in the deck, and this space is covered by a leather flap or ring attached to the "turret," and bearing on a brass ring fixed upon the deck; this leather flap is weighted with a strip of iron round the outside in order that it may fit close to the deck.

The edge of the hole in the deck, within which the "turret" is placed, is strengthened by a wrought-iron well-

ring weighing about $1\frac{1}{2}$ tons and formed of 1″ plate of wrought iron two feet deep, with angle-irons on the outside top and bottom. From this ring radiate iron beams, some leading transversely to the sides of the vessel, and the others to the deck beams, to which they are firmly attached. On these beams are laid the 1″ plates forming the deck, and upon these is placed around the "turret" a "glacis plate" consisting of a ring 30″ wide, and tapering in thickness from 3″ at the inner to nothing at its outer edge.

Over the "glacis plate" comes the deck tapering in the opposite direction from 6″ to nothing, and upon this is laid round the "turret" a ring of $\frac{3}{8}$″ stamped wrought iron plates 2′ 6″ wide, which serves to protect the deck from being scorched by the discharge of the gun.

The deck of the vessel rises at the angle of 5° from the sides towards the centre, and is formed of 1″ wrought iron plate, covered down the centre for a width of 26 feet with 8″ teak planking; the remainder of the surface is covered with 6″ planking. The deck is carried by wrought iron rolled beams placed 12″ apart between the main wooden deck beams, and the 1″ plating is laid on in strips about 12 feet long by 2′ 6″ wide, joined together by $\frac{3}{4}$″ rivets, and covering strips 4″×1″. The 1″ plating is doubled round the openings for the "turrets," hatchways, and funnel, and a double thickness is also carried, fore and aft, between the "turrets" and the sides of the ship. The armour plates are bedded upon crossed diagonal planking, which was added to the original sides of the vessel on her conversion from a three decker, making the total thickness of the timber backing three feet, as shown in Fig. 1, Plate VII.

In conclusion I may add that the "turrets" are now made concentric in place of eccentric to the platform; that in place of the small winches shown in Fig 2, Plate VII., they put a much larger one, with an endless chain to work the guns; and I believe

Captain Coles intends making the platform in future of iron.

Owing to the shortness of time given me to prepare this paper I have been obliged to curtail it in many respects; but I trust I have succeeded in conveying to the members present some slight idea of the manner the "turrets" on board the "Royal Sovereign" are constructed.

[Feb. 13, 1867.]

On the SYSTEM *of* TANK IRRIGATION *in* SOUTHERN INDIA, *and the* PRINCIPLES *of* NATIVE CONSTRUCTION *of* EARTHEN DAMS, SLUICES, *and* ESCAPE WEIRS (Plates IX. and X.).—By COLONEL MEADOWS TAYLOR.

IN Southern India, where the fall of rain is periodical, lasting only for three or four months in the year, and leaving an interval of from eight to nine months without any certain supply of moisture; where also the entire or partial failure of rain-fall is inevitably productive of famine in a greater or less degree, the storage of water for irrigation, and for the use of man and beast, has been an object of careful provision from a very distant period of time. At what date, in the history of India, the system may be said to have commenced, it is now impossible to ascertain; but from inscriptions upon embankments and sluices, upon temples, and upon copper tablets dug up from time to time, such works can be traced back, in some instances, for 1,600 years, and many in the South of India are probably much older. The fifth to thirteenth centuries after Christ, may perhaps be considered the greatest constructive period of the Hindus.

Tank, or reservoir irrigation, it may be said, was established as a system, only to the south of latitude 16° 30′, or the junction of the Manjera River with the Godavery—whence it embraced

the whole of the southern portion of the peninsula. North of this line, in the Dekhan proper, in Central India, Rajpootana, and the north-west provinces, as well as in Bengal, tanks are occasionally met with; some, as those at Bhopal, Saugor, Oodeypoor, and other places, being of large size.* Otherwise they are confined to small reservoirs, and to jheels or marshes formed by inundations. There is nothing, however, in the general construction of their dams (with the exceptions I have mentioned, and some in Rajpootana), to indicate the employment of hydraulic science, or systematic adaptation of stored water to the use of the community, in providing means of irrigation during the dry seasons of the year.

This is accounted for by the peculiar soil of the greater part of the central and upper provinces of India. Immediately north of the Manjera and Godavery Rivers, those great tracts of deep black soil commence, which, unfitted to receive any proportion of irrigation, retain enough of the rain-fall to keep the subsoil moist, even in the hottest and driest weather; and, assisted by dews, bring to maturity crops of wheat, barley, and pulse, with jowari, bajri, and other millets, which suffice for the maintenance of the people, and provide also fodder for their cattle. It is these deep alluvial soils also which produce cotton and oil seeds, the staple exports of India. In all these northern provinces, therefore, rice is not the ordinary food of the people; it is not grown locally, or if grown at all, is in small proportion to other cereals, and is used in general more as an article of luxury than as an ordinary item of provision or a necessary of life.

Irrigation, therefore, as a system—except what is furnished by the great canals from the Ganges and Jumna, &c.—does

* The Pechôlee Lake, at Oodeypoor in Rajpootana, has an area of about 5 square miles of water, formed by an earthen dam 300 yards long, with 60 feet of maximum height, faced with stone, which was constructed about A.D. 1560, by Rara Oodey Singh, who founded the city of Oodeypoor.

not exist. Where used at all, it is applied to what may be termed garden produce; that is, sugar-cane, ginger, turmeric, pepper, and vegetables of every kind. The water is raised from wells by a simple and efficient contrivance called a mote, or in some localities by the Persian wheel and buckets, and the supply necessarily depends upon the strength and durability of under ground springs, and upon the distance of water from the surface. In some localities the under ground supply of water is copious and permanent; in such places wells will be found numerous, and in general use, watering from one to four acres of land, according to capacity of supply. In others, the springs are deep-seated and capricious, and well irrigation is comparatively very limited; but whenever water can possibly be raised to the surface, even as in parts of Rajpootana from the depth of seventy to one hundred feet, it is invariably applied to irrigation.

To the south of the Godavery and Krishna Rivers, the geological structure of India entirely changes. In place of trap and basalt, granite appears, and the soil alters with the character of the rocks. In the trap formations we find large undulating downs and level plains, alternating with ranges of mountains and hills, which reach a considerable elevation. On the trap downs of the Dekhan and Central India the soil is black, and for the most part comparatively thin; but in the plains and valleys—Berar, for instance—it is frequently as deep as thirty and even forty feet without a change in character. Wherever it exists, the black soil preserves its wonderfully fertile character for the growth of dry crops without irrigation. I do not say, however, that irrigation could not be applied with advantage to many of the black soils. Where they are shallow and stony, and occasionally of a loamy character, the application of water would produce crops of greater luxuriance and certainty than at present from the rain-fall alone; for it but too frequently happens that the rain-

fall is scanty, and the shallow soil does not retain enough moisture for the crops sown. Evaporation also is more rapid from shallow than from deep soils; and, as a consequence, crops which throve well during the occurrence of rain, wither up and are often entirely destroyed by drought, without any possibility of being saved. In many localities, therefore, even of black soils, irrigation, if it could be used systematically and in sufficient quantities, would undoubtedly prove of immense benefit to the people.

In the granitic soils, however, without irrigation, no valuable crop whatever could be raised. It is not that they are uniformly waste, or unused for any cultivation; on the contrary, they are frequently well tilled, and sown with pulse, millets, and other crops which will come to maturity in the rainy season; but at best they are poor and uncertain. The black soils already mentioned occur, like alluvial deposits, in patches, as I may call them, all over the south of India, producing, as in the north, cotton, millet, and pulse without irrigation; but these deposits are comparatively of very limited extent, and form a very small proportion in the area of the Southern Provinces, in comparison with the granitic soils. Of themselves, therefore, they would be totally inadequate for the support of the population. Nor would irrigation dependent upon wells influence the rate of production in any considerable degree, or suffice for the cultivation of rice, the ordinary food of the people. For, as a rule, wells in granitic formations are not so certain in their water supply as those of the trap country, nor are the products to be raised from their use so valuable or abundant.

As the population of Southern India, therefore, increased, it is evident that means were adopted for the storage of water for purposes of irrigation; and while the usual dry crops were not abandoned, the use of water enabled not only a larger and more certain supply of provision to be raised, but ensured the

cultivation of more valuable products. The granitic soils, whether sandy or composed chiefly of stiff felspathic clay, became, under the application of water, admirably suited for the growth of rice. These soils, when flooded, and ploughed in that condition, became a soft, but tenacious mud, in which the seed could be sown; and as rice always requires to have its roots covered by water, level terraces were formed, on which the water supply could be distributed from channels, and where it was not absorbed by the clayey or rocky subsoil, in any inconveniently rapid degree.

It has been necessary to explain to you briefly the difference of soils and their products in Northern and Southern India, to account to you for the primary condition of both. The continued absence of means of irrigation in the one, as well as the non-desire for it, being attributable to the certainty of raising crops of nutritive cereals by the ordinary rain-fall and dews; and in the other, the presence of irrigation being unavoidable to secure adequate produce, which otherwise could not be attained at all. In its original condition, the greater portion of the South of India must have consisted of dreary tracts covered by a thorny, scrubby jungle, inhabited sparsely by a population which most probably was supported by the intervals of richer soils. In this condition, which is described in the great Epic poem of the Ramayun, it was found by the Hindu King of Upper India, Rama, in his expedition for the conquest of Ceylon, at a very remote period of time. These characteristics it still undoubtedly presents in a modified degree. There are occasional tracts of uncleared jungle still to be met with, the soil of which is clayey, hard, and stony, unculturable with any profit, even if cleared, without the application of water; while adjacent to, and in some localities intermingled with them, are thickly-peopled districts possessing the same soil, in which irrigation is largely used, and which are highly prosperous. There can be little doubt,

however, that both were originally in the same condition; and that the latter owe their improvement to the invention of irrigation from tanks or reservoirs, which I believe to be by far the earliest description of hydraulic engineering in India, and, in its peculiar character, perhaps in the world.

Any detail of the local history of the South of India would be foreign to the scope and purport of this paper, and indeed what exists of it is in the last degree uncertain and obscure. The expedition of Rama, King of Oude, or Northern India, for the recovery of his wife and conquest of Ceylon, is believed to have taken place about twelve hundred years before the Christian era; and in the description of the country through which the northern armies passed, we find the Peninsula, as far south as the Cavery River, was little better than a forest. Savage tribes were met with here and there; but there seems to have been no evidence of civilization until, after passing the Cavery, the "junusthan," "or abode of men," was reached. Here the northern warriors encountered civilized communities, dwelling in fair towns and cities, and enjoying the privileges of an advanced social condition. This, in fact, was the commencement of the great southern kingdom, which included Ceylon, and was then perhaps in a more enlightened condition than any other portion of India. Subsequently, in the best period of Grecian history, the southern kingdoms of the Pandu and Chola dynasties are mentioned by Ptolemy. Strabo, as quoted by Mr. Elphinstone, records that an ambassador from King Pandion, or Pandu, had been sent to Augustus. The Pandu dynasty of the period of the Periplus, had possession of the Malabar coast; and there can be no doubt that, from a very early period of time, maritime communication between India and the Red Sea had been permanently established, and that the Egyptians had preceded the Greeks in trading expeditions to the East. Dim as these records are, it is at least unquestionable that the people of the south and

west of India had reached a high state of social and intellectual advancement as early as the period of Rama's conquest of Ceylon, or 1,200 years B.C., and in some respects were equal to the Egyptians.

It is not, therefore, extraordinary, that the invention of irrigation should have accompanied other constructive inventions, architecture, and handicraft in general; and the condition of the Pandyan and Chola kingdoms of the south, and the noble works which have survived them, warrant me in ascribing to them some, if not most, of the earliest works of irrigation. We may indeed easily imagine, that where water was a necessary of existence and production, a people in even a comparatively rude state of civilization, should hit upon the expedient of damming up small streams or water-courses, to ensure a local water supply even for their cattle and domestic use; and we can follow their first rude efforts to the grand conclusions afterwards attained in the progress of architecture and constructive science—those noble reservoirs, with revetted embankments, escape weirs, and sluices for the application of the stored water to agricultural purposes which still exist, and, under comparatively slight repairs, will continue to exist for centuries to come.

If the necessities of the country, in its only periodical rains, the subsequent drought, and the intractable nature of the soil without water, suggested the earliest attempts at securing water by dams, its natural configuration mainly assisted these projects. An undulating surface presents hollows of greater or less extent, which are the beds of streams that result from the drainage of the ordinary rain-fall. In the lower portions of these streams, water was always present during the dry seasons; at first, in pools, or percolating beneath the gravel of their beds, till at length a continuous stream was perceptible which, even in the dryest weather, flowed into the sea. But in the upland regions of such rivers and their numerous tri-

butaries, streams which filled during actual rain-fall, became dry beds soon after the rain ceased; the naturally hard soil had absorbed very little moisture, and there was therefore no natural drainage to supply the beds of water-courses. What marvel, then, that this condition of things suggested the damming up of small water-courses by earthen embankments? These may have been, in the first instance, a few feet only in perpendicular height, and their configuration in the last degree uncertain, and rude of design; but it was found that they at least retained water, and an ingenious, and, in many respects, scientific people, gradually remedied defects of construction, and advanced the art till it attained the gigantic proportions we now behold.

I repeat that I consider the Pandyan and Chola kingdoms of the southern portion of India, were the birth-place of this invention; and that it was extended from thence northwards as the country became the seat of other and more extensive Hindu dynasties, and the wild aboriginal tribes which it had supported at the period of Rama's invasion, being conquered, followed the directions of civilized influences, and became settled, agricultural, and trading communities. It would not interest you to know of these dynasties; but many grew successively out of the earliest Hindu kingdoms and their conquests; and we see from the remains, clearly traceable to each, a gradual improvement in design and construction, not only of irrigation works, but in architecture, up to the period of the first Mahomedan invasion in A.D. 1310. After this period, all the southern Hindu dynasties successively disappeared, and the progress of constructive art and science, so far as their influence existed, altogether ceased.

We have two periods, therefore, of tank or reservoir works in Southern India, the one from the earliest invention up to the period of the Mahomedan conquest which began in 1310, and the second, from 1310 up to the present time.

Major Baird Smith observes in his report:—

"The extent to which it (the system of tank irrigation) has been carried in the Madras Presidency is truly extraordinary. An imperfect record of the number of tanks in fourteen districts only, shows them to amount to no less than 43,000 in repair, and 10,000 out of repair, or 53,000 in all. It would be a moderate estimate of the length of embankment for each, to fix it at half a mile, and the number of masonry works in sluices of irrigation, waste weirs, &c., would not be overrated at an average of six. These data, only assumed to give some idea of the extent of the system, would give close upon 30,000 miles of embankment (sufficient to put a girdle round the globe not less than six feet thick), and 300,000 separate masonry works. The whole of this gigantic machinery of irrigation is of purely native origin; as it is a fact, that not one new tank has ever been made by us. The revenue dependent upon existing works is roughly estimated at 150 lakhs or one and a half millions, and the capital invested in them at fifteen millions." *

Let me now beg your attention to the printed sheet of the trigonometrical survey of India which I have before me. It is remarkable as showing a portion of the northernmost establishment of systematic tank irrigation, and for the most part belongs to the first period of Hindu execution, though not the earliest. The portion here represented contains three provinces of his Highness the Nizam's dominions, Boengeer, Dewurconda, and Nulgoonda, and though several of the largest works belong to the Kootub Shahy Mahomedan dynasty of Golcondah, which was founded in A.D., 1512, and continued till A.D., 1656—the whole of the systematic execution belongs to the Hindu kings of the Andra dynasty, which, probably from the fifth century before Christ, up to

* This does not include Mysore, and the territories of H. H. the Nizam.

the Mahomedan conquest in the fourteenth century after Christ, ruled over these provinces of Telingana, as part of their most ancient possessions.

This map is on a scale of four miles to an inch, reduced from the original working scale of four inches to a mile. The great and minor triangles of the survey were laid down by the ordinary methods of large surveys, and corrected by astronomical observations; and the smaller portions were filled up by most minute plane table work, wherein every hill or rock, every stream, every rill and water-course, as well as every tank, large or small, was laid down with wonderful accuracy and completeness. It has, therefore, every claim to your confidence.

The soil of these three provinces is for the most part granite, and there are comparatively few deposits of régur or black soils. Occasional patches of jungle are met with in situations too high for the water from tanks to reach them, and it is from these places that the original character of the district can be best estimated. Some portions of these have been partially cleared for dry crop cultivation, and produce coarse jowari and millets, with oilseeds and pulse in the rainy season; but the staple product of the whole of this tract of 12,000 square miles is rice, and I need hardly state that it is the system of irrigation which alone enables it to be produced.

Examine the details of this system, and take each water-shed and catchment of drainage in succession, and you will see what admirable use has been made of it. At a first glance, and, indeed, without local knowledge, it would seem that all these lakes were natural; but there is not one natural lake in Southern India. The whole are artificial reservoirs. The country is undulating throughout. The ranges of hills shown, are of no great elevation, never perhaps extending 500 feet in height, and for the most part consist of

piles of granite rocks, the upper portions of which are denudated and bare. These occupy the crests of the natural ridges of the country, which bound the water-sheds; but occasionally, rocky spurs project into the valleys, of which advantage has been taken, in the formation of large and small reservoirs, by the construction of earthwork dams from point to point, wherever the area upwards on the stream presented a flat surface, or one at an inconsiderable gradient, to form a basin.

Trace any of the streams delineated on the map to their sources, and you will find nearly all the small tributary water-courses to have been dammed up at various points by a series of small and large embankments, each forming a tank or reservoir, small or great, according to area and capacity of basin, or estimated supply of water, until the main stream is reached, which, in its turn, is dammed up until its size is no longer controllable.

I select two instances out of the many which the map presents for illustration of these points, and I have enlarged both from the map scale, of four miles to an inch, to one of one mile to an inch. Fig. 1, Plate IX., shows the water-shed catchment of the fine tank at Ibrahim Puttun, twenty-four miles south-east of Hyderabad. This work was executed by Ibrahim Kootub Shah, King of Golcondah, who reigned from 1550 to 1560, and is therefore of the latest Mahomedan period; but the tanks above it, on the various tributaries, are the work of the ancient Hindu period. The water-shed is about nineteen miles long, with an average breadth of nearly ten, so that the diagram represents the drainage of about 190 square miles. From the most remote tributary rills, down to the large tank, you see seventy-three tanks of various sizes, all forming parts of one great system, and providing storage of many millions of cubic yards of water, and the irrigation of perhaps thousands of acres of rice, sugar cane, and other produce.

The erection of these embankments *may* have been accidental, and *may*, as most suppose, have been constructed without any computation of rain-fall or gauge of storage capacity; but I cannot think that this was invariably the case, for in detail it is very observable that provision has been made in every successive construction of a dam for the reception of overflow from upper reservoirs, and its discharge and transmission to those below.

Finally, then, the large tank at Ibrahim Puttun is reached, whence the overflow is returned to the stream which is now too large to admit of further banking up. This tank has an embankment of rather more than two miles long, and the water area may be nearly two square miles—the greatest depth being about thirty-six feet. The whole of this embankment is faced or pitched with dry stone, and the design and construction throughout is admirable, particularly of the sluice and escape weirs, the latter being of great capacity.

Fig. 2 shows the water-shed of a larger stream than that of Ibrahim Puttun. The last tank at Dewulpully is 32 miles from the source, but the water-shed catchment has only an average breadth of about 6½ miles, which would give an area of, say 210 square miles. In this are 87 small, and three very large tanks, the upper and lower being larger than that of Ibrahim Puttun. The embankments of both series vary, of course, in length and height very considerably; but they are all constructed on the same principle, and have all stone revetments and masonry sluices, without exception. The upper tank at Cherroopully has an embankment of two miles long. The second, at Pungul, of a mile and a quarter; and the last at Dewulpully, of a mile and a half. And this lake, as it may be called, is 2¾ miles long, by 1½ miles wide, and has therefore an area of 3½ square miles, and a vast capacity for storage. The whole of this series belongs to the ancient Hindu period, and is remarkable for

the intelligence by which the surplus flood is discharged from each reservoir, and the daring, so to speak, of the conception of placing two such reservoirs as Pungul and Cherroopully above the final one at Dewulpully. No accident, however, has ever happened, and the whole of these works are in ordinary use and good repair. I have only to regret that I have not exact measurements and details of the embankments of these three large tanks, and that at Ibrahim Puttun; but I propose to give details of a finer work than any of these near the city of Hyderabad, executed by Ibrahim Kootub Shah, King of the Mahomedan dynasty of Golcondah, and the constructor of Ibrahim Puttun, which will enable you to judge of the executive skill and intelligence with which these undertakings were carried out solely by native engineers.

The certainty of supply to tanks in India is derived from the sudden and copious falls of rain which occur in the monsoon, and sometimes at other periods. A fall of two inches of rain or more in a single night or day, as very frequently happens (I have known as much as eight inches in a single night), serves to fill tanks with certainty, because the surface flood is too great and too sudden to be absorbed. The same quantity of rain-fall, distributed over a month or a fortnight, would have probably no effect at all upon the supply of reservoirs. It would be absorbed by the earth. and in a great proportion carried off by evaporation. The very causes, therefore, of danger to reservoirs in other countries, that is, sudden floods, are in India the most certain and most desired sources of supply; and these strings of tanks prove, that the practical skill of native Indian engineers has been quite equal to cope with them.

Thus in the succession of tanks which you see in this map, one below another, down every one of the valleys, it sometimes happens, in unusually heavy and sudden falls of rain, especially when the basins have been already filled or partially

filled, that an upper tank gives way, and the accumulated water descends into the next. I have even known several in succession to give way, and yet it has been proved by the safety of the lower and larger sized tanks, that the capacity of discharge of flood had been perfectly well estimated, and ran off by the escape weirs without damage. In this respect, indeed, very large tanks seldom suffer; and it is only from those whose waste weirs have been constricted in the original design, or the crests of the dams kept in bad repair, that any danger can be apprehended.

In the map before you, I find the number of tanks, large and small, to be 5,641 in an area of 12,000 square miles, but it is quite possible that in counting them many small ones may have escaped me; and this furnishes to you a practical illustration of what may be fairly termed the system of tank irrigation, which, from the latitude of these provinces, extends not only across the peninsula but to the southernmost portions of it. In this map you will not find any tank with a greater area of water than perhaps four or five square miles, and only comparatively few of this size; but in the province of Kummum, to the east, the tanks are far larger, and the smaller reservoirs fewer. In one locality, the Pakhal lake, which has been formed by throwing a strong embankment across a considerable river in a narrow gorge, is twelve miles long, by two to five miles wide, and is as large, indeed, as many of the lakes of Westmoreland or Cumberland; while artificial reservoirs as large, perhaps, as one of the lakes of Killarney, are existent in many places. In the south of India and in Mysore these dimensions are greatly exceeded. The Chumbrambaukum tank, near Madras (I quote from Major Baird Smith's official report), has an embankment of three miles five furlongs in length, and from sixteen to twenty-six feet in perpendicular height. Its area is 9½ square miles, and its volume may be estimated at 3,000 millions of cubic yards

of water. It irrigates 10,000 acres of land, and produces a revenue of 50,000 rupees, or £5,000 a year, of which 7 per cent. per annum, or £350 has been sufficient for its repair.

The Veeranum tank, also near Madras, has embankments filling up natural elevations of twelve miles in length, and has an area of water of no less than thirty-five square miles. The antiquity of this tank is so great that it cannot be ascertained, and it has consecutively afforded a revenue of from £11,000 to £12,000 a year to Government.

The Caauvery Pank tank has an embankment of 3¾ miles in length, all with dry stone facing. The area of water is about seven square miles, and is distributed to the lands below by nine masonry sluices, of which, as also of sections of the embankment, diagrams are given in Major Baird Smith's report.

If it were necessary I could give you details of many other works of purely native origin, and of an antiquity extending from, perhaps, long before the Christian era down to the last three hundred years, which are even larger than these. Many such works are to be found in Mysore, and in the collectorates of Cuddapa, Nellore, and Bellary; and the lakes or tanks of Toonoor in Mysore, of Cumbum in Cuddapa, and Daroojee in Bellary—the latter constructed by a prince of the dynasty of Beejanugger in the 15th century, are in their several degrees as noble and perfect works as could be executed by any hydraulic engineer of the present day, in the most civilized and advanced countries in Europe, and under all the appliances of modern science. It is needless for me to say that before any enumeration of these works, whether as to size of dams or capacity of storage, the earthen dams in England, which have required the highest exercise of professional skill in construction, are absolutely insignificant. What I have most wished, however, to impress upon you is, not so much the excellence of the execution of individual works in

India, as the grandeur of the conception and execution of a systematic storage of water practised by all the ancient native dynasties of Southern India; and a closer examination of it, on the published maps of the Trigonometrical Survey will show you that while the system was universal in all granitic districts, the size of the tanks now existent, after centuries of continuous use, prove that no mean engineering difficulties were grappled with and overcome in a truly masterly manner; and further, that whether in construction of the earthwork, embankments, and their revetments, the masonry escape weirs, and the sluices for irrigation—the native engineers not only constructed works which have defied time and the action of the elements, but, as I conceive, must have been well acquainted with the practical scientific requirements of their profession.

These qualifications will, however, be more clearly impressed upon you and more distinctly apparent, if I take in detail the works of one large tank, the embankment of which, and its area of water and irrigational capacity, place it in the class of highest rank as to construction; and though its area of water is not equal to that of many others, or to those already mentioned, its depth, and the height of the earth-work, prove it to be an original, and perhaps daring, conception.

I allude to the Hussein Sagor Tank at Hyderabad, the work, as before stated, of Ibrahim Kootub Shah, one of the kings of the Mahomedan dynasty of Golcondah, who reigned from 1550 to 1580; and I am enabled by the kindness of an old friend, Colonel Edward Buckle, late of the Madras Royal Engineers, an officer who, during his service, had very extensive experience of irrigation works, particularly of tanks, and who has most obligingly placed his notes of this great work at my disposal for the purpose of this lecture—to give you a detail of it.

This tank, or reservoir, is situated about five miles north

of the city of Hyderabad; and its position, as well as its catchment of water supply, are laid down in the Trigonometrical Survey Map. It is partially supplied by two streams, which bring to it the drainage of the catchment from the north and north-west; but as these streams, under ordinary yearly rain-falls, are insufficient to fill the basin, a supply canal, from a point about twenty miles distant on the river Moosy, was part of the original design. This canal, during its course, was intended to irrigate the lands through which it passed, and thus much of its capacity for storage was dissipated. The whole of its line has also required repair, and in some places, reconstruction, from time to time; but the entire work has recently been renewed, and is now in excellent order, maintaining, in a great degree, the water of the reservoir against the discharge by irrigation and evaporation. The main embankment itself has required no outlay whatever since its construction, with the exception of the repair of a small breach in the northern end of the work, which occurred, I think, in the year 1832.

The area of water, when the reservoir is full, amounts, by Major Buckle's survey, to 6,300,000 square yards, or 1,300 acres, or a little more than two square miles, the greatest length of water diagonally across the tank being a little over three miles.

The bed of the basin is very regular, and was originally a plain, with an equal and easy gradient from all sides to the embankment. When full, the greatest depth of water is, on an average, fifty feet in the deepest portions, though I have taken soundings of upwards of ten fathoms a little distance from the bank. Close to the embankment, the depth is ordinarily thirty-five feet, showing a difference of fifteen feet. This may be either the result of silt, which is improbable, as the usual deposit of silt does not exceed a foot in a century, if so much; or may be occasioned by a natural ridge on which the embank-

ment was founded, and I believe the latter supposition to be the correct cause of the difference. At a rough computation, therefore, and taking the average greatest depth at fifty feet, or even sixteen yards, the area being 6,300,000 square yards, the cubic contents of water would be 6,300,000 × 8 = 50,400,000 cubic yards of water for irrigational purposes; and as each acre of rice-land requires, on on average, 5,000 cubic yards of water during its growth, the supply in the tank would be equal to the cultivation of 10,000 acres of land for one crop. Although, therefore, the superficial area of this tank is not equal to others already described, its great, and, I believe, almost unrivalled depth, raises the Hussein Sagor to a work of the highest rank.

Fig. 1, Plate X.—The extreme length of the embankment is 7,400 feet, or nearly one mile and a-half. Of this the central portion, which crosses the valley, is 5,200 feet, or nearly a mile, and there are two portions at the north and south ends, on natural ridges and of much lower elevation, which complete the work and contain the waste weirs.

The greatest perpendicular height of the earth-work in the centre is sixty-five feet, and the contour of the valley is so regular that an average of height along the central portion of the embankment may be fairly taken at forty-five feet, if indeed it be not greater. It will thus be seen that the crest of the embankment is considerably above the high level of water, very much higher, in fact, than in any other tank of which I have knowledge; but in this a wise precaution was exercised by the native engineers, for in gales of wind from the south-west, the waves beat heavily against the embankment, and as it is, their spray frequently washes over the top. A lower crest would, it is obvious, have exposed the work to danger, if not to destruction. The crest, however, is now protected by a broad-metalled road, and along the rere of the embankment another metalled road has been constructed, which has added materially to its strength.

The exterior, or water-face of the embankment, has a pitching or revetment composed of blocks of cut or hammer-dressed granite, arranged in the form of steps, the greater portion of which is still perfect. In some places, however, whether owing to the pitching being too perpendicular, or owing to gradual settlement of the earth-work, the stone has become displaced and uneven, without, however, affecting the stability of the work, and in some respects this unevenness of revetment may have served a good purpose in breaking the force of the waves better even than a smoother and more regular outline.

In Plate X., Figs. 2, 3, 4, and 5, represent sections taken at different parts of the embankment, exhibit its sectional profile. The water face has a slope of 1 horizontal to $2\frac{1}{2}$ vertical in some places, and 1 to $3\frac{1}{4}$ in others: and the average is about 1 in 3. This is, no doubt, too steep; and a slope of 1 to 1, or an angle of 45°, if not indeed more, would have been better; but the present slope has not affected the stability of the work in any degree.

The stone pitching is nine feet thick at the top; and, though the bottom could not be measured, it may be taken at eighteen feet, as the practice of native engineers is to double the width of the top; or rather from the foundation, whatever it may be, to decrease the width upwards by one-half in construction.

Whether there is any masonry foundation for the basement or not has not been ascertained; but my impression is there is none, as puddled clay, where the natural earth is strong, is considered sufficient to prevent leakage.

The upper surface of the embankment is sixty-five feet broad at its broadest part; indeed the top breadth throughout may be taken as equal to the height, or thereabouts.

The whole is composed of fine clayey earth, excavated, no doubt, from the bed of the basin, and carried up the bank by

hand in baskets. No puddle wall was needed, nor in any native tanks has this mode of construction ever been practised. In granitic soils the decomposed felspar which exists in certain proportions in all earths, acts in a most efficient manner as a binder; and when the earth has been well beaten down, either by being trampled by elephants or cattle, especially sheep and goats, or has been tamped as it were by parties of men and women beating in unison with wooden rammers, the result is a compact mass which is perfectly impervious to water.

The exterior or eastern face of the embankment is very irregular. In some places it joins the level of the fields, in others it is finished by a revetment which has done good service. In general, perhaps, the slope may be considered as 3 horizontal to 1 vertical.

As I have before said, there are escape weirs at each end, of which the northern is the longest, being about 200 feet in length, capable of discharging a stream four to six feet in depth on the crest. The weir archway at the south end is on a somewhat higher level, and assists the other in occasions of extreme floods.

There are four main sluices for irrigation, three large and one small. These buildings rise from the base of the embankment, and are handsome architectural structures or pavilions, having apartments in them at the sides, as well as the halls whence the sluice poles are managed. The peculiar character of these sluices, and the plan on which all native sluices are constructed, will be presently explained in detail.

I need not here enter upon the theory of the pressures of water, with which I will presume all who hear me to have become familiar; but I can hardly suppose that, in some form or other, it was not known to the native engineers, and so calculated before this tank was begun. An embankment a mile long, with a perpendicular depth of sixty feet, would hardly

be undertaken without sufficient data for its stability under the pressure of at least fifty feet deep of water.

In all respects, therefore, I beg your consideration of this work as a very noble result of native engineering in earthwork, not only in regard to the details of its original construction, but in the fact that it has already stood the elemental wear and tear of three centuries, and, so far as can be predicted, will continue to do so for centuries upon centuries to come.

I now request your attention to Figs. 6, 7, 8, and 9, of sluices, which shows the plan and intention of these safe, simple, and most efficient contrivances for the discharge of water, common to all tanks in Southern India. There is considerable variation in the architectural designs of them, but none whatever in the principle. I have purposely shown one fitted for a tank which has to discharge say twenty feet of water, and it is simply by adding stories that the height of those of the Hussein Saugor and other deep tanks is reached. The largest of those sluices discharges forty feet of water from two sluice levels of twenty feet each, leaving a residue of about ten feet of water which is never used, as it is considered unsafe to expose entirely the base of any embankment and the bed of the tank to the unchecked action of the sun.

We will, therefore, take a sluice of two stories, with ten feet of water to be discharged from each, the lower story having double apertures of discharge.

Fig. 6 shows a section of the sluice and of its tunnel under the embankment. The foundation is laid on rock, if available, if otherwise, on concrete; and should this be insecure, in consequence of the nature of the soil, upon wells, the intervals of which are filled in with concrete. The masonry of the water face, both of the platform and sluice shafts, is generally of cut stone, neatly joined. Brick is rarely or never used. In many instances I have observed an interval of strong con-

crete laid between the outer and inner faces of the masonry, in order to prevent percolation; but if truly squared and joined, the stone masonry is sufficient. The platform of the sluice is almost invariably constructed of concrete well beaten down, so as to be impervious to water, and the whole presents a mass of great strength to resist the pressure upon it.

The front and side walls are then carried up, leaving a perpendicular shaft (A) behind, through which the water falls into the tunnel.

The tunnel joins the shaft horizontally, and continues under the embankment. The spot on which the water falls from above is usually constructed of heavy flags or slabs of stone; but there is generally enough of water in the tunnel to prevent the falling water from above impinging upon the stone foundation.

In the Hussein Saugor sluices the tunnel is five feet high, by four feet wide inside, but in smaller tanks these dimensions are reduced. In all cases, however, they are sufficient for a man to pass from end to end.

The floor of the tunnel is composed of blocks or slabs of stone, neatly joined side by side, and laid in strong concrete; and they usually project beyond or into the walls, when slabs of sufficient length can be obtained.

The sides are constructed of strong masonry, and the interior face is generally of cut, or hammered-shaped stone. The walls are from two to three feet thick, and are built upon the floor.

The roof is composed of blocks or slabs of stone like the floor, laid upon the walls (Hindoo architects never use arches) side by side, and neatly fitted together; and over these is an outer covering of concrete two feet thick, rising to three feet in the centre as shown in the section (Fig. 9). I need hardly observe that this work is entirely completed before any earthwork is laid over it.

At the end of the tunnel outside the embankment is a cistern, which receives the water of the sluice, and from the orifices in which the water flows into the channels of irrigation.

The action of the sluice is as follows (Fig. 6):—The water from the tank falls through a conical orifice in a stone flag or slab (B), which is strongly cemented into the upper floor of each story of the sluice above the shaft directly into the tunnel; and thence runs into the cistern from whence it is discharged. The tunnel *is never filled to the roof*, because the orifices in the cistern are placed a foot or so below the level of the roof; and as the maximum discharge from the head orifice can never vary, an equal discharge, whatever it may be, is maintained from the cistern. The tunnel, therefore, is no more than a drain or culvert which can never, under any possibility, be filled, and consequently no pressure upon any part of it can exist. To my perception, therefore, this simple contrivance is safer than an iron pipe laid under the earthwork, which has to sustain pressure according to the depth of water above it: and is certainly more manageable because more accessible.

And the method of discharge of water from the head orifice is equally simple, safe, and effective. A pole of wood (C), the end of which is shaped into a cone to fit the orifice in the head stone (B), is held in an upright position by a gallows beam of stone, that is, a transverse piece fixed to two uprights (*vide* Fig. 7 of the elevation of the sluice) from which it is worked. This pole usually passes through two transverse beams, or if the distance be great, even three, in order to keep it steady.

Now if the conical end of the pole (*c*) be let down into the conical orifice no water whatever can pass out. It is literally the cork to the bottle. On raising the conical end, which is easily done from the upper cross beam, the emission

of water begins, and can be graduated to a nicety. The man who has charge of the sluice knows by experience, that if he lifts the pole an inch and puts a peg into the first hole in the shaft of the plug or stopper, a certain quantity of water will escape, enough to irrigate certain portions of land. If more land is to be watered he knows also how much the plug ought to be raised; and if the sluice aperture is altogether opened, the utmost capacity of discharge is attained. In some very large tanks, where a large amount of water has to be discharged, I have seen two orifices in each story. It will be admitted, I think, that nothing can be simpler or more effective than this conical plug of wood fitting into a corresponding aperture in the stone. The greater the weight of water above is, the effect is only to make it fit the more securely, while the plug can be raised in any proportion to suit the discharge of water required. If the invention were ever used in this country, a well known formula would determine the maximum discharge, and its fractional parts in the raising of the plug. This would be calculated very simply, and could never vary.

In regard to the sluice itself, there is no internal pressure upon any part of it. The water falls from the head orifice clear of the sides of the shaft. No upward pressure can exist upon the roof, and consequently no danger to the earthwork can arise from below. The lateral outward pressure against the sides of the tunnel, from the shallow stream of water running through it, is too insignificant to deserve mention, and the apertures in the cistern, which are always equal, or superior to the discharge from the orifice, prevent any accumulation of water in the shaft and tunnel. Even supposing any obstruction to exist in the apertures of the cistern, the water could only rise to the crest of its walls, which, being on a level with the roof of the sluice, no pressure could ensue that the mass of masonry could not resist. In some instances, and in order to ensure additional height for the exit of water

for irrigation, the cistern walls are raised above the roof of the tunnel, which involves of course additional pressure upon the roof and walls; but I have never seen bad consequences ensue from this arrangement, and by opening the lower holes of the cistern any undue pressure could be immediately relieved.

If it were possible to have invented any more efficient system of sluices, it is certain, I think, that the able scientific engineer officers of the Madras Presidency, under their constant supervision of ancient native works, would have invented something better, or improved upon the old design. But no alteration has ever been made; and the diagrams which I now show from Major Baird Smith's reports, prove that in the construction of a new sluice to the Manapaukum tank, near Madras, the ancient system was adopted. In this sluice, each story has two discharge holes, and there might be more if necessary. The tunnel and cistern do not differ from my own diagram. As I have before stated, it is impossible to have any plan more efficient, safer, or more controllable; and from north to south, and east to west of the tank irrigation system, no other form is ever met with, whether in the insignificant reservoir of ten acres, with its sluice of one story, or in one of ten square miles, with its tiers of storied sluices like the Hussein Saugor.

Instances of masonry dams to large tanks are not unknown About nine miles south-east of the city of Ahmednugger, in the Dekhan, a very noble work was begun by the Nizam Shahy kings of the Ahmednugger kingdom, in the 16th century; but owing to the distraction of the State under the Mogul invasion, it was never completed. The site was admirably selected upon a stream which had a catchment supply of great extent, about 80 sq. miles, where two projecting spurs left an interval of about three-quarters of a mile. Above this spot there was a large plain, with a gentle gradient inwards. The works of the embankment are about half finished, and consist of a

powerful wall of solid masonry, built of cut stone, raised with a batter of 1 in 6; and behind this is an earthen embankment. I had occasion to propose the completion of this work, when Commissioner of the province in which it is situated; and having surveyed the area, found that the water, by a contour level, would have covered about two square miles, while the greatest depth would have been 64 feet. One can only admire the vigour of conception under which such a work was contemplated, and in great part executed; and there was no reason whatever to suppose that originally it would not have been perfectly successful.

Another noble native work, of masonry throughout, is the dam across the river Boree, which flows under the fort of Nuldroog, in the Dekhan, 24 miles east of Sholapoor. This fortress was a frontier part of the Beejapoor kingdom, and usually held a large body of troops; but the fort being constructed on a high basalt rock, had no supply of water except that of the river which ran round its base. To raise the water so as to be readily accessible to the garrison, and ensure an unfailing supply, a dam was thrown across the gorge, upwards of 300 feet in length, and 72 feet perpendicular, from its crest to the pool below. It was of solid masonry throughout; twelve yards in thickness at the top, with a batter to the water face of about 1 in 10. It was fitted with sluices at the base, in strong archways, which could be opened when silt accumulated in the basin, and had two archways at the crest for the passage of the ordinary stream. In flood the river passed over the crest, and fell in a magnificent cataract into the pool below. The dam has been in existence upwards of three hundred years. It was built by Ibrahim Adil Shah I., about A.D. 1580, yet not a stone of it has ever been displaced, nor has it ever needed repair.

I may mention also a very noble work, now about 60 years old, which was constructed at Hyderabad by the then Prime

Minister of H. H. the Nizam, Meer Allum, to supply the city with water. In its construction an English engineer officer, Captain Russell, was employed, and the design is his own, carried out by native architects. Here a masonry dam, 2,640 feet in length, or half a mile, was thrown across the bed of a tributary of the Moosy river, at a point where two rocky eminences approach from opposite sides. The dam itself is simply a great bridge built on its side, the arches being ellipses, springing from and strengthened by piers, as if it had to stand upright. The crest of the dam is only four feet wide, but the thickness of the arches and piers is increased by steps (not batter) down to the foundation. In the centre the dam is about 50 feet high, and the area of water it holds about 1½ square miles. A channel or canal from the river Moosy keeps this tank always full; and the water not required for the supply of the city is used for the irrigation of rice fields and gardens up to the city gates, about two miles distant. The work of this masonry dam is so good that it has never required repair, and though occasional floods have gone over the crest, not a stone has been displaced. I regret that I have not plans of this work to exhibit to you.

I could multiply the instances of native execution of remarkable works, but I have already trespassed very long upon your forbearance, and further examples would only, perhaps, be a repetition of details of earthworks with dry stone revetments.

Before I conclude, however, there are some points in connection with the construction of reservoir tanks which I beg to bring under your consideration.

One of the weakest points in all Indian tanks or reservoirs is the escape weir for surplus water; and in many instances these works have been found to give way, and to have caused great loss. The breach of them may be attributed to two causes: one, originally defective foundations, which have been

undermined by pressure of water from within; and another, the cutting away of the tail of the apron of the weir by the action of flood water passing over it.

The ordinary escape weir, or calingula (Figs. 11, 12, 13, 14, and 15, Plate X.), as it is called, of native tanks, is a masonry dam at one extremity of the embankment, or in the centre, or wherever the natural configuration of the ground best admits of it. It may be fifty to three hundred feet long or more; and along its crest upright stone slabs, about six feet high, are placed at an interval of about two feet, strongly built in with the masonry. When any flood in the tank is subsiding, branches of trees or twigs are woven as it were into these uprights, and puddled with clay and sods behind; and thus extra water is retained of from two to five feet in depth. Should another flood occur, this temporary erection can be cleared away, or broken in a few minutes, and the water released. Below the crest of the weir an apron extends, partly of rough stones, partly of concrete, to a length which protects the rear base of the dam; and where the foundation of the dam has been laid upon rock or stony ground, there is little danger to be apprehended.

When, however, the soil is loose or weak, the greatest precaution has to be exercised; and of the many trials the form of weir which I bring to your notice in Figs. 16 and 17, Plate X., has, perhaps, been most successful. The, as it may be termed, wave configuration of the crest of the weir has the effect of throwing the water upwards at the tail; and meeting a second rise of smaller size, its force and impetus are checked and weakened, so that the flood passes away without the excavating power at the extreme end of the weir, which has so frequently proved destructive. As the result of long experience, and much patient investigation by engineer officers of tank works, this kind of escape weir might possibly be found of advantage for reservoirs in this country, particularly

in cases where the site of the weir may be soft, or liable to be undermined.

In no instance which has ever come under my observation, have puddle walls been introduced into native tank embankments. I believe that native engineers or constructors would conceive them to be sources of weakness rather than strength, as leading to greater dependance on the puddle wall than on the entire embankment; and though this may be an extreme view of the subject, I know that they would consider an efficient consolidation of the entire earth-work of the dam, to be preferable to any other means of security. The means adopted for consolidation are very simple, and very efficacious, and might easily be adopted in this country. Every portion of the loose earth, as deposited, is carefully beaten down; and as it usually retains some amount of moisture in excavation, it binds readily and securely. The earth is carried in baskets, and each basketful is thrown down by a twist of the basket, so as to be spread out evenly and thinly. Bands of men and women follow, who sing in chorus, and pound down the earth with wooden rammers. These generally have round, or square flat heads; but I have found square-pointed heads more efficient, as serving to beat the earth more securely and perfectly together.

The sluices of native tanks have rarely wing walls to connect them with the pitching or revetments of the embankment; the walls of the sluice built up from the platform, are indeed frequently independent of the revetment altogether. But it is safer, I consider, in erecting a sluice, to provide it with wing walls, and to unite these with the revetment by concrete. (*Vide* section of sluice, Fig. 6).

The revetment or pitching of native tanks is generally very irregular, and hardly two will be found of which the slope of the revetment is equal. In the Hussein Saugor the pitching is at a slope of three and a half, or say on an average, three to

one, which is evidently too great; and had not the slope been constructed of huge blocks of stone, built, and tied or bonded into each other, like steps, it is probable much of it would have subsided into a rough outline, and at an angle of 45°. Elsewhere, in most cases, the pitching has been built upon the face of the earth-work at its natural slope of one to one, and in these instances it has remained as it was constructed. These revetments are invariably built of dry stone-work, presenting as rough a face as possible; for the native constructors are well aware of the efficiency of large rough stones to resist the action of the waves. A very common fault in native pitching is, that instead of placing the stones perpendicular to the line of earth, they are built horizontally, and are thus very liable to slip when the action of the water ensues upon the face of the earth-work.

In all or most native tanks, the rear slope is much extended. Whether the front or water face be one to three, or one to one, the rear slope is three to one, or four to one, or in many cases even more. As a principle among native constructors, the more the rear slope is spread out the better, and experience proves that the principle is correct.

Breaches that have occurred in tanks, are frequently observed to have been made at the point opposite to which the main stream enters the bed, and this has been attributed to the current flood dividing the still water, and rising several feet at the point where it impinged upon the embankment, before it could spread out. I confess, however, that I have never been able to establish this point. When the great reservoir at Nuldroog, which had been emptied to clear out the silt, was being filled by a fresh in the monsoon, the first portion of the flood, as it touched the dam, did undoubtedly rise in the centre; but, as a deposit of water took place, the force of the current was entirely broken by the inert mass of water; and the point of junction receded

up stream, leaving the interval between it and the dam without any motion whatever until the basin was full, when the water poured over the crest, and the current resumed its downward flow.

Two material points in the erection of earthen dams, which should on no account be neglected, and which, if neglected, are certain sources of danger, are first, the ensuring an adequate amount of bank above the highest computable flood; and, secondly, an adequate escape weir to provide for discharge in case of any flood when the reservoir is full. To the evident neglect of these two essential precautions, several of those terrible accidents which have befel English embankments may be attributed. Now, though I have known native tanks in which the crests of the embankments were, so to speak, critically unsafe, although they had lasted for centuries, yet the escape weirs were very ample, and capable of discharging double the cubic contents of the highest known floods.

Again, I have seen broken embankments in which ample provision had been made against rise of water, if the capacity of flood discharge had been sufficient; but the small dimensions of the escape weir have proved beyond a doubt, that, unable to discharge a sudden flood, the water had risen to the crest of the embankment, flowed over, and speedily made a breach in it from behind.

So far as the safety of the embankment is concerned, therefore, the height of its crest above the high water line, and its capacity of discharge of flood water, are far more essential points than the mere thickness of the embankment, which, if the earth-work be well consolidated, is a secondary consideration altogether; and I have often been surprised at the thinness of native embankements in proportion to their height, which had effectually resisted the action of water for centuries. It must, therefore, be well remembered, that no embankment, however solid, no puddle wall, no

nicety of construction, can stand against water which, flowing over the crest, or washing that crest away by its waves, flows over the rear slope; and that in such a case destruction must inevitably ensue, and cannnot be stayed. The great aim of the engineer, therefore, should be, to prevent the chance of any such contingency, and the means of doing so, are entirely in his own power.

Embankments are rarely known to give way from percolation of water, unless, indeed, it becomes great and increases to a stream. Even then, by digging boldly upon the stream and puddling it with clay and straw combined, the leak may be stopped. Such leaks may occur from the burrowing of rats, or in India, of lizards into the earth; from defects in the consolidation, or from actually inadhesive earth. The junction of the masonry of the sluice with the earth-work is always considered an especially weak point, and in deep tanks is invariably protected by a bed of concrete between the masonry and the earth-work. I may here mention that the proportions for tank-work concrete in India is two measures of gravel to one of strong lime. There is, however, one other cause which it is most important to consider, and that is, the presence of stones in the earth-work. No honest native constructor in India would allow a stone as big as a man's fist to be thrown down with the earth ; should any be brought, they are picked up and thrown away. Should there be any percolation in an embankment and stones be present, the water gets way, as I may call it, round them, at the same time displacing the earth. Fine earth is homogeneous, and percolation to a certain extent may even assist its consolidation, indeed frequently does so; but earth and stones are not homogeneous, and can never be brought to unite with that fixity which is necessary to the security of an earthen work required to resist water. When I read the official reports of the condition of a Yorkshire embankment which

had burst, my wonder was, not that it had burst, but that it had ever retained water at all; for in it there appears to have been almost as much rough stone, rubble, and shale, as there was earth.

I think, however, as I am not a civil engineer by profession, I need to inform you whence my experience in tank embankments was derived, in order to establish any confidence I may deserve from you, and to obviate any impression that I have derived my information at second hand; but whatever I have stated in this lecture has been the result of practical observation and experience. I was at one time of the period of my Indian service, Political Superintendent of an independent native state called Shorapoor, the Rajah of which, a minor, was under the protection of the Government of India. A Regent had been appointed after his father's death, but soon after died, and I was directed to administer the affairs of the Regency myself. The country was about equally divided between granitic and black soil, and in the former were several good tanks in working order, and some, of which the embankments were broken. The State had fallen almost into ruin; but the revenues increased rapidly, debts were paid off, and under a fitting economy, a surplus began to accrue. An officer in India, in the situation I held, though he may not be a professional Civil Engineer, yet if he desires to be useful, and to benefit his district, he should be able to survey, lay out, and construct a line of road; make or repair a jail or court-house; submit projects for bridges and culverts, irrigation channels, and other necessary works ; and these projects have to be tested by professional engineer officers before they are sanctioned. When, therefore, the Shorapoor State could afford the outlay, I began to propose such projects, and to execute works of a moderate cost under my own responsibility. I was especially interested in works of irrigation; for I had daily proof, in the demand for lands that could be irrigated,

of their value to the farmers, and their enhanced value to the State. Lands which let for a shilling an acre, or less, for dry crops, were worth 15 shillings for water crops. I therefore studied the theoretical part of the subject, as far as English data would carry me, which I confess was not very far; and soon found it was better to go to the native constructors for practical working experience.

After several repairs of tank embankments, which were invariably successful, I determined to try some work on a larger scale. Seven miles from Shorapoor was a tank at a village called Bohnall, about half a square mile in area, or say 350 acres. It irrigated a garden of the Rajah's, and some rice grounds. The embankment was fabulously old, and was a fine piece of earthwork faced with stone, the greatest height 36 feet. It was 620 yards long, and terminated in an escape weir built upon a rocky piece of ground, which rose from the water, and continued for a short distance northward. As the water in the tank could not rise higher than the crest of the escape weir, and when full, still left 18 feet of the old embankment uncovered, I determined to lengthen the embankment and raise the escape weir; for the area of the water-shed of the small weir which supplied the tank was 90 square miles, and the amount of water which ran to waste very considerable. I therefore took levels of the ground to the north, following a slight natural ridge, which, being hard ground, afforded an admirable foundation; and having connected these with the level of the end of the old embankment which rested against a hill, I found I should have to add 1,100 yards to the old bank, and to raise the escape weir 12 feet, which would leave a difference of six feet from the high water level to the top of the old embankment. The construction of 1,100 yards of new earthwork was, no doubt, a considerable undertaking; but it nowhere exceeded 30 feet in perpendicular height, and therefore was not very formidable. Having prepared my plans and sections

of the work, they were submitted for the opinion of Colonel Edward Buckle, then superintending engineer, at Hyderabad, from whose kind professional suggestions and directions I had before derived much assistance. My plans were approved of, and forthwith put into execution. The work was finished in a year, 1850, during the dry weather; and its first trial was a very severe one. At the opening of the Monsoon, when the basin was very partially filled, a fall of four inches of rain in one night completely flooded the tank. A portion of the new work, of which the crest of the stone pitching was not quite complete, was in danger for a short time, owing to the really heavy waves which beat on it; but bundles of straw, with fascines and gabions hastily made, saved the dangerous spot, and the work was safe. I have since heard that no part of it has ever required repair. The area of water, according to contour level and survey, proved to be upwards of 1,700 acres, or very nearly 2¾ square miles; and taking the average depth at five yards, of an area of 8,228,000 square yards, the result is 41,140,000 cubic yards of water, which was stored for use, instead of, for the most part, running to waste. Subsequently, this tank was still further enlarged; a low ridge at the south side was cut through, and water admitted to another valley, across which an embankment about 200 yards long and 36 feet high was constructed. This reservoir, which was about 100 acres in extent when full, filled easily, proved perfectly secure, and the Bohnall works were complete. I hear also occasionally from native friends at Shorapoor that no repairs have since been required to them.

Neither of these new embankments had puddle walls; but the earth was well tamped, and the passage of the cars carrying stone for the pitching of the water face added usefully and effectively to its consolidation.

Encouraged by the success of the Bohnall works, and by the material increase of revenue which ensued from them, I

projected a much larger reservoir in a valley to the westward, near the village of Kuchuknoor, about two miles from Bohnall, and separated from it by a range of low hills. Through this valley ran a stream which carried off the drainage of a catchment of about 200 square miles. The site I selected for the embankments was one in which the natural advantages were very great. Two ridges of ground approached the stream from the opposite sides of the valley, falling northward and southward, but with a greater slope into the basin to the north than on the south side; and the contour level showed that, except in the centre, the earthwork of the embankment would be comparatively light. The dam would be 5,700 feet in length (Fig. 18, Plate X.). At the east end, the ground declined from a sheet of solid granite at the surface, to the stream; and taking this as the high water line, the level was carried across the valley to the opposite side. This level showed that the depth of water in the centre would be 60 feet, and the embankment was decided to be 70 feet perpendicular, leaving 10 feet above high water line, for the crest of the embankment. Fig. 19 shows the section of this portion.

A contour level taken from each end of the proposed embankment showed an area of $5\frac{1}{4}$ square miles of basin, thus proving the extent of the natural depression behind the ridge I selected. Cross sections of the basin were taken in six places, which afforded an average of a little more than 21 feet of water storage. The basin, therefore, would hold about 113 millions of cubic yards of water, which, with allowance for evaporation, would irrigate not less than 10,000 acres of land.

The ordinary rainfall in the Dekhan may be taken at an average of 30 inches, though it has been even less for a succession of years. Allowing, therefore, for absorption and evaporation, the residue computed was twelve inches, which, on an area of 200 square miles, that is, on 619,520,000 square

yards, would give a result of 203,140,000 cubic yards of supply, which greatly exceeded my requirements; and it was evident that a very large waste weir would be necessary. On this point, however, there was no difficulty, as the sheet-rock at the east end of the bank, from whence the highest water level had been taken, was very lightly covered with soil, and continued perfectly level for several hundred yards. This rock, in fact, formed in itself a natural escape weir, only requiring a slight masonry crest two feet high to correct the level. As in the Bohnall tank, the native constructors proposed the sections of the earthwork to be as follows:—The top of the bank to be equal in breadth to the perpendicular height, with a slope of 1 to 1 in front, and 3 to 1 in the rear; and these proportions to be continued throughout. This is nearly or quite the principle of the sections of the Hussein Saugor bank, and appears to me the *traditional* dimension of all native earthen banks. I give this section drawn to scale, for the highest portion of the Kuchuknoor bank, that is, in the bed of the stream. Fig. 20. My deepest section in the Bohnall work had, however, stood so well that I determined to preserve the same proportions, that is, 30 feet at top, with a slope of 1 to 1 in front and 4 to 1 behind. Thus at the base, my bank at the highest point would be $70+30=100$ feet for front, and $70\times4=280$ feet for the rear slope, the total of the base being 380 feet. (Fig. 19.) The native plan would have given $70+70=140$ feet in front, and $70\times3=210$ for the rear, or 350 feet in all. (Fig. 20.)

The Kuchuknoor work was entirely approved of and sanctioned, no alteration of any kind being suggested by the confirming engineer, Col. Buckle, either in the plans or specifications. I therefore commenced it in 1851. Three of the four sluices, one of one story and two of two stories were completed; the third sluice of three stories, with double apertures of discharge to the two lower, was in hand. The masonry

foundation for the bed of the stream was laid, and the earthwork, which had been commenced simultaneously from both ends, was more than half finished, when, in 1853, the Raja came of age: his country was made over to his own management, and I was withdrawn to the charge of another and more extensive province. The project of this tank had always been a favourite one with him, and there were ample funds for its completion. He had watched the execution of the work with the greatest interest, and the water would have added at least from 50,000 to 75,000 rupees a year, £5,000 to £7,500, to his income. He promised faithfully to complete it; but after going on partially with the work for a year, he fell into bad hands, and was ruined. The works, therefore, remain incomplete. About the same time, or a little afterwards—1851—I submitted specifications for two other large tanks or reservoirs. One, at the village of Sirwall, would have had an area of $1\frac{3}{4}$ square miles, or 1,060 acres, the length of bank being 1,235 yards, or 3,705 feet, and its greatest perpendicular height 54 feet. Another at the village of Jewurgi, with a bank 1,262 yards long, the greatest height of section being 35 feet, the area of water being about $1\frac{1}{2}$ square miles, or 960 acres. I need not, however, go into any details of these works, as they were planned on the system already described. These embankments were also put in hand, and that at Sirwall about two-thirds completed, when, as I have said, they were left to be finished by the Rajah. The Province of Shorapoor is now the property of His Highness the Nizam; but I fear there is little hope that any of these works will be completed, though there is nothing to prevent them being carried out to a successful issue.

In my new province, I submitted several projects for tanks to Government as part of a system for the interception of the drainage of a range of hills which was running to waste. Of these, two were put in hand, one of which was

completed. The other, at the town of Tooljapoor, was of considerably larger size, about half finished, when the mutiny broke out, and all public works in India were stopped. The dam would have been 1,000 feet long, and the greatest perpendicular height of bank would have been 52 feet in the bed of the stream, and the greatest depth of water 42 feet. There would have been one sluice, of two stories, for irrigation, to discharge 32 feet of water. The area of water, when filled, would have been about 300 acres. Many other projects, some of a much larger character, had been submitted, and were under consideration when the mutiny broke out. The works were never resumed, for, in 1860, the province, under a new treaty, was retransferred to his Highness the Nizam's Government, and it is hardly probable that the works have been continued.

Such, gentlemen, has been my personal experience in the construction of tanks or reservoirs with earthen dams; and it is from these works that I derive the practical experience which I have endeavoured to convey to you. I do not think there is any other point in connexion with the subject on which, at this late hour, I could venture to detain you; but, should there be anything that I have overlooked, I shall be happy to supply it to the best of my ability on a future occasion.

It seems to me that, under the fast growing requirements of Great Britain for the storage of water for the use of towns, mills, and other purposes, this branch of hydraulic engineering will be greatly extended; and in the study of details of practical execution, the tank works of India, which are, I think, very little known in England, are in all respects well worthy of your study and imitation. Above all, many most useful hints may be obtained from the most ancient of the great works of Southern India, which, I think, would simplify present English modes of construction, both of embankments, and their necessary adjuncts, waste weirs and sluices.

While, under proper precautions, there is nothing simpler, safer, or more durable than an earthen bank to retain water, so, on the other hand, under defects of foundation, construction, and design, there is nothing more perilous in the thickly populated localities of Great Britain.

Postscript.—Some observations upon the details and diagram of this paper having ensued, at its conclusion, I am induced to offer a few remarks upon the relative proportions of English and native dams with reference to their resistance of water pressure.

The form employed in English works, is in section a pyramid, with sides at a slope of three to one, front and rear; the roadway at the top to represent the puddle wall. Thus, for a perpendicular height of 50 feet, the base would be $50 \times 6 = 300 + 20$, or whatever the centre puddle wall roadway might be. The native proportions have been already explained at page 55.

The English form exposes a very large proportion of the water face to the active pressure of the water; and, it is assumed, that this pressure has a consolidating power on the earthwork. My own impression is that it would be a disturbing one, and is therefore to be avoided; and that in place of additional earth-work on the water face, it would strengthen the bank more materially to add it behind on the native system. As I have stated in this paper, the object of native tank constructors in India is, to avoid downward, or disturbing pressure of water upon earth-work as much as possible; and this is exemplified in the section of the Hussein Saugor dam, the front face of which is on an average slope of one horizontal to three vertical. Nor, in any deep tank with

which I am acquainted, has the slope of the earth in the water face, exceeded one to one, or 45 degrees.

Under these circumstances I submitted diagrams of both sections, that is English and native, to Professor S. Haughton, of Trinity College, and have to acknowledge his courtesy in the result which he has given, and which, in a scientific point of view, cannot fail to interest all engineers engaged in constructing dams for reservoirs. Under permission from the Professor, I subjoin his calculation:—

WATER EMBANKMENT.

"Confining attention altogether to the danger of an accident like that of the Bradford Reservoir (caused by the slipping of the embankment), we have the following results:—

h = depth of water.
b = length of base of inclined plane.
l = length of face.

1. Horizontal thrust of water $= \frac{h^2}{2}$

Vertical pressure of water $= \frac{hb}{2}$

"The horizontal thrust is independent of the slope, and the vertical pressure must be added to the weight of embankment in estimating resistance to slipping."

I.—INDIAN EMBANKMENTS.

a. Resistance due to bank.

$$70\left(\frac{70}{2} + 30 + \frac{280}{2}\right) \times 2\tfrac{3}{4} = 39{,}462{\cdot}5$$

b. Resistance due to water,

$$\frac{60 \times 60}{2} = 1{,}800{\cdot}0$$

$$\underline{41{,}262{\cdot}5}$$

ENGLISH EMBANKMENTS.

a. Resistance due to bank,

$$70\,(210 + 20) \times 2\tfrac{3}{4} \qquad = 44{,}275$$

b. Resistance due to water,

$$\frac{60 \times 180}{2} \qquad = \underline{5{,}400}$$

$$\underline{49{,}675}$$

"The horizontal force displacing the dam is,

$$\frac{h^2}{2} = \frac{60 \times 60}{2} \qquad = 1{,}800$$

"If both dams were water-tight *throughout*, the English dam would excel the Indian in proportion of 49,675 : 41,262·5; but in practice the English dam is water bearing up to the puddle wall, and therefore the water pressure must be regarded as applying directly to that wall, so that half the embankment next to the water offers no resistance to the horizontal thrust. The resistance of the English dam is therefore reduced to half its solid element—viz.,

$$\frac{44{,}275}{2} \qquad = 22{,}137{\cdot}5$$

and is little more than half the resistance of the Indian dam, if the latter can be regarded as water-tight throughout.

"The preceding calculation shows that it is impossible to regard the water as consolidating the dam in any case. Its consolidating effect is measured by the vertical pressure, which is inconsiderable, being

In Indian dam, 1,800.
In English dam, 5,400."

In reference to the foregoing result, therefore, it appears to me, clearly demonstrated that the *traditional* steep pitch of the water face of an embankment was not without scientific foundation; and that the elongated slope of the English section does not, in fact, add to its strength, unless the principle of construction be altered.

M. T.

[Read, March 13, 1867.]

Description *of a* 20 ton Crane, 60′ high, 31′ 6″ sweep (Plate XI).

By W. Anderson, President.

Before commencing the construction of the Conway and Britannia bridges, Mr. Stephenson instituted—under Mr. Fairbairn's directions—a series of experiments, the fruit of which is most of our present knowledge of the nature and properties of wrought-iron girders, composed of plates united by riveting. Since that period the use of wrought-iron for constructive purposes has increased very much, and Mr. Fairbairn himself, seeing the strength and rigidity which could be imparted to tubular structures, patented their application to the curved jibs of cranes, and applied his invention extensively, boldly, and successfully.

Cranes of ordinary proportions, with curved jibs, will raise bulky articles to a greater height than those constructed on the triangular, or direct tension and thrust system; but they are more costly, and difficult of transport and erection, especially in distant lands. Where, however, the height of a crane is very great, compared with its sweep, the curved tubular form possesses great advantages over every other. Such an instance it is now proposed to bring before the Institution.

The Russian Government required for their dockyard at Nicholaeff, in the Black Sea, a crane to lift 20 tons with a sweep of 31′ 6″, and a height of 60 feet, and after proposing several forms, the author was instructed to construct one on the curved tubular system. It will not be necessary to occupy the time of the meeting with a theoretical investigation of the strains developed in the various parts of cranes of this description; those who may have occasion to look into this matter, will find it ably treated in our Honorary Secretary's

work on the "Theory of Strains," Vol. i., pages 74 and 121. Neither will all the minute dimensions be given now, as these will be found in the plates accompanying the paper. It is proposed to describe the general arrangement and construction only, and to point out some of the more important peculiarities.

The crane consists of a bent wrought-iron girder pivoting at the bottom of a well of masonry, and rolling near the ground line in a cast-iron ring, through the intervention of "live rollers." The hoisting gear is bolted directly to the back of the crane, the chain passing over and outside the jib to the shieve in its head, thence to a falling block, and back again to an anchorage in the jib. The turning gear is of the ordinary kind, being a train of wheel-work, gearing into an annular spur-wheel bolted to the roller-path.

The footstep of the crane is of cast-iron let into masonry; in it, on a steel lens, turns the wrought-iron toe, which is forged with a square head fitting loosely into the lower end of the crane girder, and held laterally by eight keys, by means of which it is set truly to the axis of the crane. The vertical weight is carried by a gib and key passing through the centre of the girder immediately over the toe block. A recess is provided in the masonry to allow this key to be withdrawn, so that the toe-piece may be pulled up inside the girder for examination or repairs, or any downward wear of the footstep may be compensated for by driving up the key. The eight keys by which the lateral adjustment is obtained, have all strong gib heads to facilitate their withdrawal. Steps are riveted inside the girder, and manholes arranged, so that easy access may at all times be had for oiling and examination.

At the surface of the ground is a cast-iron roller-path held down by eight foundation bolts which penetrate to hand-holes opening into the bottom of the well, where their ends are secured by keys to cast-iron washers. To the lower internal flange of the roller-path are fixed eight small rollers on

which travels a wrought-iron "live-ring," set with sixteen spindles, on to which are dropped the cast-iron "live-rollers," interposed between the roller-path and the circle bolted to the crane-post. This arrangement of live-rollers is very superior to the ordinary system of confining them between two rings, as any one of them can be removed without disturbing the rest; the author is glad of the opportunity of acknowledging his obligation to Mr. Stoney, from whose 30 ton crane on the South Quay this device was copied.

The roller-path or circle bolted to the crane-girder, does not, as is generally the case, encircle it completely, but is carried round a little more than half the circumference. The section at the front, through which the greatest pressure is transmitted, has solid sides strongly ribbed, the two side-segments are lighter, and cast with open arms.

An annular spur-wheel, serving as a fulcrum for pivoting the crane, is bolted to the top flange of the roller path, and a cast-iron chequered foot-plate is bolted to the crane girder, covering the annular wheel and revolving level with the ground.

The pivoting pinion is keyed on the lower end of a short vertical shaft, working through a brass bush let into a broad cap or disc, bolted to the back foot-plate, the hole in which is large enough to enable the pinion to be withdrawn through it when the bolts of the disc are removed. The upper end of the vertical shaft carries a bevel wheel, geared into by a pinion keyed on the handle shaft, the whole supported by a wrought-iron bracket riveted to the back of the crane girder. The ratio of power in the turning gear is as under:

$$\frac{\text{Annular Wheel.} \qquad \text{Bevel Wheel.}}{\text{Pinion 12 teeth} \times \text{Pinion 12 teeth}} = \frac{\text{154 teeth 2}'' \text{ pitch 98}'' \text{ diam.} \times \text{62 teeth 1}\tfrac{1}{2}'' \text{ pitch 29·6}'' \text{ diam.}}{\text{Pinion 12 teeth} \times \text{Pinion 12 teeth}} = \frac{66{\cdot}3}{1},$$

that is, it requires $66\frac{1}{3}$ turns of the handle to make the crane turn once round.

The handle-shaft of the hoisting gear works in pedestals bolted directly to the back of the crane, and its pinions engage on one side, into the second motion, and on the other into the third motion wheels, or may be placed out of gear with either if it is desired to lower by means of the break. The second motion shaft is carried through the sides of the crane-girder, and its pedestals rest on cast-iron brackets bolted to them. Outside the pinion of this shaft is keyed the break wheel, actuated by a wood-lined strap; the fulcrum of the lever by which it is actuated being a cast-iron cone, bolted to the side of the crane.

The third motion shaft is carried in pedestals bolted to the back of the crane, the pinion end being overhung to meet the large chain-barrel wheel, the pedestal at this end being fixed to a wrought-iron bracket, strongly braced to the crane side, and carrying also the ratchet and pall arrangement.

The chain-barrel is four feet in diameter, with a spiral groove to take 130 feet of $1\frac{1}{4}''$ chain. It is staked with four keys at each end on a shaft working in two cheeks of $\frac{3}{4}''$ plate bolted to the back of the crane post, and having cast-iron jaws, for the reception of the brasses, riveted on; the main spur-wheel is also staked with four keys on to its shaft.

The barrel is made of large diameter, in order to accommodate all the chain in one coil, nothing being more objectionable than the practice of allowing two or more layers of chain to coil on each other. The method of staking heavy wheels with four keys is not sufficiently known or understood. It is very difficult to insure a good fit between a bored wheel and turned shaft when these are large, and if the fit is good, the momentum of the mass offers a serious difficulty to driving one on to the other, and above all, if repairs have to be executed, after the machinery has been some time at work, it is extremely difficult, frequently impossible, to disunite them.

By casting the eye of the wheel considerably larger than the shaft, and cutting four key-ways in it to correspond with key-flats on the shaft, and then staking the wheel truly by fitting in four keys, it is always easy to move them, and to get the wheel on or off its shaft. Should the space on one side of the wheel be so confined that the ends of the keys are not easily accessible, these should be driven in pairs from opposite sides, that is, two keys at right angles to each other should drive from one side, and the other two from the opposite side, by which means the keys can be tightened or loosened by driving from the same side.

Such a case presented itself in the chain barrel wheel, and the keys have been arranged accordingly.

The keys that secure the chain barrel to the shaft are eight in number, and disposed so that the four at one end are 45° to one side of the four at the other, in order that if it ever became necessary to remove them, they could be driven out by a drift through the opposite eye.

The chain is carried over rollers, outside the curved jib, to the 24″ shieve in its head, and so contributes to the strength of the tension flange, which is not the case where it is carried up inside the jib. The falling block is made with massive cast-iron sides, so as to give it weight enough to overhaul the chain. The ratio of the hoisting gear is as under:—

SINGLE PURCHASE.

$$\frac{\text{Handles, } 18'' \times \left\{\begin{array}{l}\text{3rd motion spur-wheel} \\ \text{84 teeth, } 4'\ 5\tfrac{1}{4}'' \text{ diam., } 2'' \text{ pitch, } 4\tfrac{1}{2}'' \text{ face,}\end{array}\right\} \times \left\{\begin{array}{l}\text{Chain barrel wheel,} \\ \text{105 teeth, } 9'\ 8\tfrac{1}{2}'' \text{ diam., } 3\tfrac{1}{2}'' \text{ pitch, } 6'' \text{ face,}\end{array}\right.}{24'' \text{ radius of barrel, } \times \text{ pinion 12 teeth, } \times \text{ pinion 12 teeth.}}$$

$$= \left(\frac{45{\cdot}9375}{1} \times \frac{2}{1} \text{ falling block} = \frac{91{\cdot}876}{1}\right)$$

DOUBLE PURCHASE.

$$\frac{\left(\begin{array}{l}\text{2nd motion spur-wheel,}\\ \text{48 teeth, 2′ 4}\tfrac{3}{4}\text{″ diam., 1}\tfrac{3}{4}\text{″ pitch, 3}\tfrac{1}{2}\text{″ face,}\end{array}\right)\times 91{\cdot}875}{\text{Pinion, 12 teeth} \times 1} = \frac{367{\cdot}5}{1}$$

Hoisting 20 tons with the double purchase, six men would therefore require to exert a force of $20\frac{1}{3}$ lb. each on the handles, or, allowing $\frac{1}{4}$ more for friction, which is not too much for a large crane comparatively seldom used, the working pressure may be taken at 25 lb. per man, which, with the single purchase, would be competent to raise five tons.

The bottom of the curved crane girder, 15′ 6″ below the level of the ground, is 18″ square. It expands upwards for 13 feet till it becomes 4′ 6″ deep and 3′ 9″ wide; it then rises vertically, and with parallel sides, 17′ 6″ above the ground where it commences to curve and taper to 18″ square at the head. The convex and concave curves are both struck with a radius of 47′ 10″, the centres being 4′ 6″ apart. The sides of the girder are composed of $\frac{3}{8}$″ plates, joined by narrow covering strips, and each of the flanges of two layers of $\frac{3}{8}$″ plate connected to the sides by means of 3″ × 3″ × $\frac{1}{2}$″ angle iron. At the level of the roller-path the sides are stiffened by angle iron with cross braces between them. The total length of the girder is 90′ 6″; it was sent to its destination in two pieces of nearly equal length. Owing to the great height of the crane, there is danger of its being overstrained by dragging loads towards it from a distance, to guard against which a cast-iron plate has been fixed on each side containing a warning, in the Russian language, that side-pulls should be avoided, and the heavy lifts made vertically. The unit strain under the full load is five tons per square inch of nett area in tension, and four tons on the gross area in compression. No account has as yet been received of the performance of the crane.

The finished weight of the crane is as under:—

	tons.	cwts.	qrs.	lbs.
Boiler-maker's work, - - - -	17	12	0	9
Castings, - - - - - -	11	3	2	20
Forgings, - - - - - -	1	6	2	21
Total weight, - -	30	2	1	24

The price delivered alongside ship in London, was - - - - - - £1,180 0 3

[December 11th, 1867.]

ADDRESS.

BY

W. ANDERSON, PRESIDENT.

GENTLEMEN,

It is with no ordinary emotions that I return once more to the city in which my professional career commenced, to address you from the chair which has been occupied by so many distinguished engineers, and to which your unmerited suffrages have raised me. I cannot but feel that the distinction you have conferred is due more to the sense you entertain of the interest I have always felt and evinced in this Institution than to any professional merit I possess. The election you have made is perhaps more remarkable on another score—namely, that I am the first purely mechanical engineer whom you have raised to the President's Chair, and on that account I have thought it desirable to confine the observations I have to make more particularly to manufacturing and mechanical sciences than to the broad and comprehensive surveys of civil engineering which have marked the addresses of my predecessors. I will, however, preface my remarks by dwelling for a moment with

pride and thankfulness on the peace and prosperity that has fallen to our lot since we have enjoyed the hospitality of this noble College, which has extended to us the liberal and enlightened encouragement that most foreign learned societies derive from their Governments. I fear that it is too much the custom of members of our profession to hold lightly the efforts of those who associate themselves, as we have done, for the purpose of registering our achievements, and submitting them to the analysis of public discussion. Such feelings are not only ungenerous, but injurious to those who entertain them: firstly, because the record of completed works is the most valuable guide to the engineer, a guide to which those who will contribute nothing themselves do not scruple to fly when occasion requires it; and secondly, because the preparation, reading, and discussion of papers are the best possible means of acquiring habits of accurate thought and intelligent study. Bacon has said that "reading makes a full man, writing an exact man, and speaking a ready man." An engineer ought to possess all these qualities; and I appeal to your experience whether a man, though gifted with talent of high order, with competent education and great industry, is still but imperfectly fitted for his profession unless he has also acquired the habit of expressing his ideas clearly and fluently in public, and the power of committing them to writing with facility and grace. But these desirable accomplishments can only be attained by constant practice—the best, often the only, field for which, before they are called into actual use, is in the meetings of societies such as ours. How often have we seen men of known ability make themselves ridiculous and lose their client's cause in giving evidence before juries and Parliamentary committees; how often, on the other hand, have men of inferior talent acquired undeserved renown simply by graceful elocution and ready wit. I would earnestly counsel

the younger members of the Institution, and especially the students of the Engineering School, not to neglect the opportunities our general meetings afford of acquiring the art of public speaking and writing. They will certainly, at no distant date, feel the benefit of the labour thus bestowed, and reflect with gratitude on the powers here acquired when they face with calmness and credit the searching, often rude and intimidating, examination of counsel, or the criticism of rival engineers. I am glad to find that the last two sessions have been fully occupied, that many interesting and instructive papers have been read, and from the works I see carried on in this country I am justified in anticipating for this session similar full and profitable employment.

The melancholy duty falls to me of recording the death of one of our Honorary Members—the Earl of Rosse. Time will not permit me to say all that crowds into my mind at the recollection of a man who has achieved a world-wide reputation. This is, indeed, of less consequence here, because I am satisfied that every member of this Institution is perfectly familiar with the eminent services Lord Rosse has rendered to astronomy, mechanics, education and other branches of social science. When I reflect upon the patience, perseverance, mechanical ingenuity and skill he exhibited in the construction of his great telescope, I cannot help feeling regret that his rank was so exalted, and that he was not obliged to apply his rare talents to the profession of which we are members. What losses has the world not sustained, what further fame might he not have achieved, is a theme of regretful contemplation. We must only be thankful that we can claim him as a native of Ireland, that he was content to dwell on his ancestral acres, and to make the village of Parsonstown as familiar to the scientific world as the name of the great city in which I now address you.

An industry in which Ireland has very successfully

engaged is paper-making. Within the last few years considerable progress has been made, not only in the treatment of well-known raw materials, but in the introduction of new ones. Paper may be regarded as a "felt" of pure woody fibre, obtainable from a great variety of plants, which may be classed as follows:—

1. Forest timber, from which the fibre is obtained by grinding.

2. Plants, such as cotton, in which the fibre is developed pure.

3. Plants, such as hemp, flax, palmite, &c., from which the fibre may be obtained by maceration.

4. Plants, such as the cereals, esparto, halfa, &c., from which the fibre is obtained by boiling in solutions of caustic soda.

I am not aware that the manufacture of wood-pulp has yet been introduced into Ireland; yet, I think, there are many situations where it could be applied with advantage. The process merely consists in pressing short blocks of wood against a rapidly revolving coarse grindstone, a stream of water, flowing over the stone, carries away the finer particles, while the chips and splinters are replaced upon the stone. The pulp is next strained through revolving cylindrical wire sieves, which separate the fibre ground sufficiently fine from the coarser stuff, which is re-ground between stones, arranged much as in flour mills. The resinous and other soluble impurities of the timber are washed away by the large quantity of water used, and pure fibre remains without the aid of any chemical treatment. The white woods, such as willow, aspen, poplar, lime, and deal, yield a pure white pulp that does not require bleaching to make white paper. Wood-pulp cannot be used by itself, but must be associated in the ratio of from 50 to 80 per cent. with stronger materials.

Mills for the production of wood-pulp have been established

with great success in Sweden, Germany, and other parts of the Continent; and in many situations, by no means rare in Ireland, where water-power and timber are abundant, and labour cheap, but where cost of carriage makes coals and chemicals dear, wood-pulp will be found a profitable manufacture and find a ready market among our numerous rag paper mills.

Cotton, and the produce of the hemp and flax plants, present themselves to the paper-maker chiefly in the form of rags, sailcloth, cordage, tow, and waste. These materials are already partially prepared and require very slight boiling in alkali to get rid of grease and other impurities before they are fit for converting into pulp. Their manipulation is well understood. I would merely remark that in dealing with new plants it is well not to overlook the fact that simple retting or maceration, with subsequent scutching, will set free the fibre quite as well as the more costly process of boiling in caustic soda.

The straw of the cereals and esparto contains from 40 to 50 per cent. of available woody fibre, which can only be set free by boiling in a solution of caustic soda. This operation for all cereal straws is best performed under a pressure of about 80 lb. per square inch, and in steam derived from the solution itself, so that during the 8 or 9 hours the boiling continues, the strength of the liquor should not vary. Paper made from straw so treated looses the harsh and glossy appearance that straw papers generally possess.

Esparto and the allied grasses are best boiled for about four hours in open caldrons and by injected steam. With either material the proportion of soda ash used is very large, from 16 to 25 per cent. by weight, and there results a dense black liquor which requires to be carefully washed out; and which, if discharged into rivers, is apt to destroy animal life, and be lashed into thick foam by every weir or water-wheel,

emitting in summer a very unpleasant smell. Within the last few years many attempts have been made to get rid of the "black liquor." Some by chemical re-agents have tried to destroy its colour and noxious properties, but without any success. Others have simply evaporated the greater part of the liquor, and by incinerating the dry residue have recovered a considerable proportion of the soda, in the form of impure carbonate, which, however, is again available for use after being rendered caustic by the addition of lime. This process, however, is very costly, as one ton of straw requires about 12,000 gallons of water to wash it thoroughly, and such a volume cannot be evaporated by less than 5 tons of coals, worth about £4; about 3 cwt. of soda would be recovered, which would thus cost 27s. per cwt. for fuel alone, the price of fresh soda being 10s.

The importance of this subject was forcibly brought under my notice through the stoppage of the Stowmarket Paper-making Co.'s Mill, in Suffolk, by an injunction of the Court of Chancery, for pollution of the small stream on which it stands. It became indispensable to purify the refuse; the firm with which I am connected was intrusted with the task, and after visiting several mills, both in Great Britain and the Continent, where apparatus was in use for the evaporation of "black liquor," it occurred to us that while a great deal of ingenuity had been expended in reducing the cost of evaporation, no attempts had been made to diminish the quantity of liquor to be operated on. We therefore instituted some experiments on straw pulp, and abandoning in succession exhaustion, steam, and hydraulic pressure, at last perfected a machine in which the pulp was passed in a continuous sheet between 3 pairs of rollers, and succeeded in expressing all but about ½ per cent. of the soda-bearing liquor, and so far cleansing the pulp that further washing became unnecessary. By this means only 2,000

gallons of "black liquor" was produced to each ton of straw, and the cost of the recovered soda ash reduced to about £6 per ton, fully 80 per cent. of the soda used being recovered. It does not appear that the soda thus used over and over again deteriorates in quality, although patents have been taken out to remedy this theoretical evil, which, after considerable experience, I have not found to exist.

Esparto, and the allied grasses, are very much easier to treat, as the boiled grass simply pressed in mass yields up most of its black liquor, so much so that it may be bleached without previous washing; but still, I think, a more regular and satisfactory result will be obtained by breaking the grass in an ordinary washing machine, and then passing it through the roller machine.

By adopting the process above described, and by constructing settling ponds to catch the solid refuse of the machine, the Stowmarket Mill was enabled to resume work, with the agreeable result that the injunction which had appeared certain ruin, was the cause of enhanced profits. At the present moment there are paper-makers in Ireland who cannot use straw on account of polluting the rivers on which their mills stand. I trust that it may be useful to them to know that a moderate outlay will not only enable them to use a cheap and excellent material of native growth, but will add considerably to the economy of the process.

There is one other substance from which paper, or rather parchment, can be made, and that is the fibrous portions of the hides of animals, under the patent process of Captain Brown, R.N. This gentleman, possessed of rare inventive faculties, first came into public notice many years ago, as the inventor of the beautiful process of manufacturing seamless cartridge papers now in operation at the Royal Arsenal, Woolwich. That process consists in sucking a layer of paper pulp on to flannel moulds, drawn over perforated pipes, in which a partial

vacuum is created. By means of the same system, but with animal pulp, Captain Brown has succeeded in making jointless cartridge boxes, bayonet and sword sheaths, and many other similar articles. The method of preparing animal pulp is briefly this: Clippings of hides and skins from the tan-yards—the raw materials of the process—after soaking in water and preliminary cleansing, are steeped in a warm solution of alkali, then cleansed mechanically, after which the alkali is neutralized by acid, the substance crushed between fluted rollers, and finally placed in an ordinary beating engine, where it rapidly assumes the form of common vegetable pulp, and may be made into sheets of paper either by hand or on a machine. Of course each step of the manufacture requires its special apparatus and dexterity of management, even the arrangements of the paper machine are peculiar for pulp so much more dense than ordinary vegetable fibre, and incapable of enduring the heat of steam-drying cylinders, as it is ordinarily applied. Captain Brown's process has for several years been in abeyance on account of a ruling of the courts of law, which defined it to be paper, subject to duty, and not parchment, hence it could not be used for legal documents, or sold as anything but paper. The duty, however, on the latter article has been taken off, and the manufacture is now being re-established on a large scale at Romsey, in Hampshire, the artificial parchment commanding a high price, compared with its cost, for book-binding, and many other purposes for which skins have been used. I believe that this is the first time in which this elegant process has been publicly explained, and I have mentioned it because from my intimate knowledge of the process I have reason for considering it a manufacture well adapted to the resources of this country.

Closely allied to paper-making is a manufacture, which within the last three or four years has assumed great commercial importance, and which possesses special interests to our

profession—I allude to gun-cotton. From the time of its first discovery till a year or two ago this substance was little better than a scientific toy; but the researches of Mr. Abel of the Royal Laboratory, Woolwich, and, above all, the persevering skill of Messrs. Thomas Prentice and Co., of Stowmarket, have given to gun-cotton an importance, the ultimate magnitude of which it would be rash to predict. The preparation of pure gun-cotton is very simple. Raw cotton-wool after being carefully cleansed is steeped in concentrated nitric acid thoroughly washed and dried. In this state it is so violently explosive as to be practically valueless. The problem has been how to mitigate with certainty and precision the rate of combustion. It has been found impracticable to prepare the gun-cotton of varying strength, so that the only remaining means is to dilute to various degrees the one strong quality that can be obtained. At first it was sought to effect this by spinning the prepared cotton into yarn, and then twisting it into rope, or weaving into cloth, with similar unprepared material; but although this process yielded very excellent results, the requisite amount of uniformity in quality was not obtained. It was then suggested by Mr. Abel that the prepared cotton might be converted into pulp as for paper making, and in that state most intimately mixed with unprepared pulp in an ordinary beating engine, and then made into sheets of explosive paper for small arm cartridges, or into cakes of any form and weight for cannon and blasting charges. This system appears to have met with complete success, every shade of intensity can be obtained with certainty, and the Messrs. Prentice appear likely, in a rapidly increasing business, to reap the reward of years of persevering and most intelligent application to this important manufacture. The peculiar advantages of gun-cotton are mainly these:—The manufacture being carried on in the wet state up to the final drying is absolutely devoid of danger. Gun-cotton when

loosely packed is not violently explosive; it rather burns fiercely. It makes no smoke, and consequently does not foul firearms, and is peculiarly valuable for blasting in mines. Its report when fired is not so sharp and piercing as that of gunpowder; and a charge of given intensity occupies only one-sixth its space, in consequence of which the blasting holes may be made much smaller and more economically.

Important improvements have recently been made in the production of raw cane sugar. To make these apparent it will be better to give a brief sketch of the method hitherto generally adopted in our own colonies and in most of those of other countries.

The juice of the sugar cane, after being expressed in the crushing mill, is run into "clarifiers," or large vessels, in which it is raised to the boiling point by means of steam. The free acids in the juice are here neutralized by lime, and the albuminous matter becoming coagulated, entangles many other impurities, and rises to the surface as a thick scum, which is carefully removed. The partially clarified juice is then drawn down into a copper wall, or battery of coppers, generally six in number, of various sizes, the largest receiving the weak juice, which is ladled over from one to the other, till at last, in the smallest pair, it reaches the granulating point, and is removed, or "struck" into coolers. In the better arranged estates concentration is only carried up to a certain point in the coppers, or "taches," and granulation obtained in vacuum pans.

The defects of this system are:—1st. The addition of lime in the clarifiers does not always or completely arrest the progress of acidity, and produce otherwise a clear juice. 2nd. The coppers being heated by direct fire, have their sides, even at the last, at the excessive temperature of from 300° to 400°, at which the acetate of lime contained in the juice is to a considerable degree decomposed, free acid is formed, and, as

a consequence, colour and yield, rapidly fall off. 3rd. As the coppers have to be skimmed and otherwise manipulated, they must be open to the air, but the process occupies many hours, the taches generally remain charged all night, so that there is plenty of time for the juice to deteriorate, which, in the hot climate of the sugar-growing countries, it rapidly does.

In Guadaloup and Martinique a somewhat better system prevails, the clarified juice being run into batteries of two or three tubular boilers, the last of which, containing the strongest juice, is heated by high pressure steam, the second boiler by the vapour given off by the juice of the last, and the first boiler by that of the second, the liquor being finally brought to the granulating point in vacuum pans. This system, called "double," or "triple effect," requires a perfectly clarified juice, which, as I have already explained, cannot always be obtained.

It appears to be admitted on all hands that four main objects should be aimed at in the treatment of cane juice:—

1st. Rapidity of manipulation to counteract the decomposing effects of a hot climate.

2nd. Lowness and regularity of temperature during concentration,

3rd. Exclusion from contact with the atmosphere; and

4th. Continuity of process implying economy of labour and fuel.

These conditions have been successfully embodied in the patented process of Mr. Walter Knaggs, a Jamaica sugar-planter. According to his system, the juice, as it runs from the cane mill, has injected into it a stream of sulphurous acid gas, which possesses the property of preventing the spread of acidity to which cane juice is so liable, and of partially destroying colouring matter. The juice is then let into the ordinary steam clarifiers, where it is brought to the boiling point as rapidly as possible, and the scum skimmed off. The

sulphurous acid having now performed its functions, is neutralized by means of cretaceous earth or clay, and the juice being kept well agitated, a small quantity of the permanganate of soda or potash is added, until a visible separation of flocculi takes place. The acids formed by the combination of manganese and oxygen possesses the property of destroying or precipitating certain organic matters which are not removable by lime, and in this fact consists the great merit of this system of clarification. The juice is next drawn down into the subsiders, or settling vessels, where lime is added, until, after a few minutes' rest, the liquor becomes perfectly bright and clear, and fit for concentration, all impurities having been completely separated. The next improvement is the substitution for "taches" or coppers of a shallow tray, heated by steam generated either directly under it or supplied from other boilers, and with the heating surface augmented by a large number of tubes placed close to its surface. Over the tray and among the tubes the juice runs three or four inches deep, and in a length of about 20 feet, is concentrated from 8 to 28 degrees Baumé, each portion of juice remaining only a few minutes on the evaporator instead of hours, as on the "tache" system. The tray is covered with a double hood, and the vapour from the juice is collected to be used for further concentration up to the granulating point in the "Granulator"—a vessel where the final operation is performed at a temperature of 180°, chiefly by the agency of a current of air acting on the films of warm juice raised on the blades of a revolving paddle wheel.

Instead of using the granulator, the tray may be made to concentrate rather less, and the vapour of the juice used, as in the "double effect" system, preparatory to granulation in a vacuum pan; but it is important to note that Mr. Knaggs' system not only dispenses with the agency of large quantities of water and powerful air pumps required in the vacuum-pan

method, but the granulator actually yields a large supply of distilled water, and is therefore peculiarly valuable to the many estates which are badly supplied. The whole process being continuous, may be conducted throughout under cover, effecting a great economy of manual labour, so difficult to be procured in our sugar-growing colonies, and preventing the pilfering, which is a serious source of loss to the planters.

The evaporating tray has, to a certain extent, been anticipated by Fryer's "concretor," or tray heated by direct fire. I need hardly remark that although this is an undoubted improvement on the copper wall, it retains one of the defects of the latter system—that of the high temperature of its plates—and cannot, therefore, compare with the moderation and steadiness of temperature of the apparatus heated by steam.

This process of concentrating liquors is, of course, applicable to the refining of sugar, and many other operations where it is desirable to regulate the temperature and study economy of fuel.

I shall depart from the course laid down for myself in the resolution to dwell upon manufacturing processes only, in order to draw your attention to the Dublin Corporation Water Works. I do this for two reasons. Firstly, because I am anxious to remind you that the scheme by which Dublin and its environs are to enjoy, for all time, an abundant supply of excellent water, was originated and projected by Mr. Richard Hassard, a member of this Institution, who, however, has been most unfairly deprived of the honour and emoluments that should legitimately have accrued to him in personally carrying out his own scheme; and secondly, because recent events have shown that however convenient and economical it may be to carry out the ordinary sanitary works of a town by means of an amateur committee of citizens and officers, whose experience has been confined to such operations, it is unsafe, and indeed

an act of folly, to intrust works of great magnitude, involving immense outlay and considerable risk, to other than engineers of first-rate standing, and whose training has been specially directed to the construction of works similar to those contemplated.

If you will refer to the sixth volume of our Transactions, you will find a paper by Mr. Hassard, read here in March, 1861, which places beyond question that our colleague did not merely vaguely hint that Dublin might be supplied from the water-shed of the Vartry, but that in 1858, when the question was being investigated by Mr. Hawksley, on the part of the Corporation, he described the scheme in detail, showed the grounds on which his opinion was based, and submitted plans, estimates, and descriptive particulars of the project. Mr. Hassard's scheme, with some trifling modifications, has been, as you are aware, adopted; it might have been well for the pockets of the citizens, the honour of the Corporation, and the credit of our profession, if he had been appointed chief engineer, a position to which he was so fairly entitled. In August, 1865, on the occasion of the Mechanical Engineers of Birmingham meeting in Dublin, Mr. Neville, the Corporation Engineer, read a paper "On the Dublin Corporation Water Works for the supply of water from the River Vartry," and in this paper he does not even mention Mr. Hassard's name, but leads his hearers to infer that the locality was simply recommended by Mr. Hawkshaw, acting as Royal Commissioner, and that the scheme was designed by himself.

I think it beyond question that the calculations Mr. Hassard made as to the amount of water to be expected, will be fully realized. He took the average rainfall in Dublin from 1837 to 1852, as 29·08 inches; he corrected this for altitude by gaugings made for six months, by Mr. Bateman, near Ballysmuttan, about eight miles distant from the Vartry basin, and found that an increase of 60 per cent. might fairly be expected,

giving in all a mean average rainfall of 46½ inches, and this anticipation has been more than borne out, as the rain gauges placed in the district by the Corporation have given, for the years 1861, '62, '63, '64, a mean average of 53·64 inches, notwithstanding that the years '63 '64 had been years of unusual drought.

Mr. Hassard's general design has been departed from in one respect, by the omission of a safeguard, with which all large reservoirs situated similarly to that at Roundwood, should be provided. The flood water-course alongside, which was intended to intercept, in case of need, the drainage of a greater portion of the watershed, and afford the means of diverting the River Vartry, and prevent its flowing into the reservoir, has not been constructed, and it is, consequently, quite possible that if the necessity of emptying it should arise at the commencement of a wet season, and when the reservoir was full, months, or, at any rate, several weeks, might elapse before the outlet pipes could discharge more than the supply, and effect the required object.

The failure of the great embankment at Roundwood can hardly be said to be very instructive, except, perhaps, to the young members of the Engineering School, in bringing under their notice a mode of construction which they should ever most sedulously avoid. The cause of failure will be best understood by reference to the accompanying diagrams. It was necessary, of course, to introduce into the reservoir the service and emptying pipes, this latter having been thought of only after the Sheffield catastrophe, and although there was every facility for driving a tunnel through the solid rock at one end of, and outside the embankment, it was deemed preferable to build a culvert through the bank, and under its deepest part, a mode of construction long since abandoned by all experienced engineers. The culvert was partly excavated in the rock, and arched over, the back of the arch being perfectly

smooth. A plug of brickwork, in cement, through which the pipes were carried, was built in the centre of the culvert, under the puddle wall, the culvert abutting against its smooth face on either side. The top of the brick plugging was also smooth. As soon as the pressure of water became sufficiently great on the inner face of the plugging, a leakage was established between the end of the culvert and the plugging, aided by water passing through the radial joints of the arch of the culvert, and spreading along its smooth outer surface, soon found its way round the unbroken plane between the brickwork and the puddle wall, and made its appearance in jets of dirty water through the joints of the arch of the outer culvert beyond the plugging, and was thus the test of the mischief going on within.

I need hardly tell you that the safe course would have been to drive a tunnel through the rock at one end and outside the bank; but when once a culvert was decided on, the arch and plugging should have been deeply ribbed, and the ends of the culvert toothed securely and deeply into the faces of the plugging.

The 48-inch pipe inserted for lowering the water was only carried through the brick plugging, its mouth being in the centre of a long tunnel. In the event, therefore, of accident, to the outlet-valve, there would be no convenient means of stopping the water. Such an accident did, in fact, arise just before the leak in the embankment appeared. With great difficulty, and by the aid of divers, a wooden ball was got into the culvert and against the mouth of the pipe, and the valve taken out for repairs, but, unfortunately, just after this had been done, the leak occurred, and the ball being jammed by the pressure of the water in the mouth of the pipe, it so happened that at the very moment when its services were most needed, it could not be made use of.

Had the obvious and common precaution been taken to

carry the pipe through the tunnel, and turn its mouth upwards, so that a ball could at any moment be lowered into it by means of a crane attached to the water tower, a vast deal of anxiety and danger would have been avoided. The embankment is now being made good in the manner in which it should originally have been constructed—always reserving the point that it should never have been there—the pipes will be arranged in the way here recommended, and the citizens of Dublin will have the satisfaction of knowing that they have paid a good many thousand pounds for the professional education, so far as hydraulics are concerned, of the Water Works Committee and its officers.

The workmanship and materials of the works, I am informed by competent judges, are extremely good, and reflect much credit on the contractors. Some accidents to the pipes must of course, be looked for on such a length of main, and it is not likely that so great a range of works can be executed without a few faulty parts, but I have very little doubt that in due time Dublin will have a water supply second to none in the United Kingdom, and sufficiently copious to afford means, at a low rate, for working the small hydraulic machinery now so much used in our larger towns, and so valuable for the smaller industries.

An exceedingly convenient as well as novel arrangement of pumping machinery for the drainage of reclamations has been devised and brought into operation by Mr. A. Harmens, of Amsterdam. This gentleman has exhibited a great deal of skill and enterprise in reclaiming the "polders" or lakes in Holland, and having experienced the great cost of fixing powerful pumping engines on the marshy borders of the reclamations, it occurred to him to construct a pontoon into which the engines and pumps should be placed and floated into the lakes which would thus be pumped out in succession by the one set of machinery, with very slight expense in removal from

one site to another. As the pontoon sinks the delivery pipe of the pump is lengthened, and finally when the water is all out, the machinery is either taken to pieces and the boat pulled out, or a dam is constructed round it, and the whole apparatus is floated out into the canal receiving the drainage. When large sums of money have been expended in forming embankments, it is, of course, of great commercial importance to get the water out as quickly as possible so that the land may be placed in the hands of the farmer. The permanent machinery necessary to keep the land drained once it has been reclaimed is comparatively small and easily fixed, whereas the pumps necessary to clear out the water that has for ages formed a sea over the land must be very large. Hence Mr. Harmen's system, which completely dispenses with the cost of transport and fixing, is likely to prove very valuable, and induce the reclamation of lands which would not repay the heavy outlay upon the old method. The first of these pumps, constructed by the firm with which I am connected, consists of an Appold centrifugal pump capable of raising 50 tons of water per minute, driven by a pair of horizontal engines fixed on the top of a Cornish multitubular boiler. The engines work at 120 lb. pressure cutting off by means of double-slide valves at one-fourth the stroke, the whole of the machinery fitting into a pontoon 52 feet long, 10 feet broad, and 4 feet deep, drawing 3′ 3″ of water. The floating pump was towed over to Rotterdam without difficulty, and by means of rivers and canals brought close to a lake near Amsterdam, which was being drained. It was hauled over the bank, launched, and set to work in a very short time, and at small cost, its performance comparing very favourably with that of condensing engines, which were already at work on the shore. There are many places where floating pumps would prove very useful not only as temporary but as permanent machines, and save the large sums of money that must frequently be expended on foundations.

In the construction of steam engines little or no progress has recently been made, which is the more remarkable when we consider the wide field which exists for improvement. It is popularly held that the steam engine is a model of perfection, the beau ideal of mechanical skill. In reality, however, it is still very far from utilizing even a fair proportion of the mechanical power known to be derivable from the combustion of fuel.

The researches of Joule have shown that 1 lb. of water heated 1° F. is competent to raise 772 lb. 1 foot high; and, consequently, 1 lb. of water converted into steam should raise $990 \times 772 = 764{,}280$ lb. 1 foot high A good boiler will evaporate 8 lb. of water per lb. of coal; hence, 1 lb. of coal should be competent to raise 6,114,240 lb. 1 foot high; or, if consumed in 1 min., to produce 185 H.P. But a very good expansive condensing engine consumes about 3 lb. of coal per H.P. per hour, which is equivalent to 1 lb. of coal producing 20 H.P., or less than $\frac{1}{9}$th the power that coal is known to be capable of developing. I cannot help thinking that if this fact, which I have stated very roughly, were more generally known it would stimulate inventors to produce improvements in the steam engine which would make as marked a feature, even in this age of discoveries, as Watt's inventions did at the commencement of this century.

It may be asked in what direction are we to look for the wonderful improvement that I anticipate in the application of heat. The question has many answers. In the first place, a great economy might arise in employing a fluid from which to generate steam of the lowest possible latent heat. Æther has been tried upon this principle, but practical difficulties have hitherto stood in the way of its adoption. In the next place it may result that steam is altogether a bad channel through which to convert the energy of combustion into power, and we may have to look into the subtle

operations of nature to find out the best application of chemical energy to prime movers. In this respect it is that the researches of Professor Haughton in animal mechanics possess such interest to us. With his well-known ability and energy he has already made considerable progress in assigning to muscles mechanical values. He has proved, for example, that the force of a healthy human muscle amounts to 102·55 lb. per square inch of cross section; that the total amount of work a muscle is capable of producing is in proportion to its weight; that the moments of motion round the joints are proportioned to the weight of the muscle; and that the consumption of food produces more work in the bodies of animals than the corresponding weight of fuel burned in a machine. It is quite within the limits of probability that these researches may lead to most important results, and justify, in a startling manner, the advice of the Hebrew sage, to consider the ways of nature and be wise.

The terms "high" and "low" pressure engine now no longer convey the meaning they formerly did; indeed, in many cases, the terms might with correctness be reversed. They used to signify "non-condensing" and "condensing" engines; these now frequently work at the same boiler pressure, in which case the condensing engine is really under the higher pressure of the two. There is a growing tendency to reduce the size of engines and to increase their speed to obtain the requisite power. For permanent engines I think this tendency is mischievous, because high speeds mean frequent repairs. To obtain smooth running there must be a certain relation between the weight of the reciprocating parts—the pressure of steam—grade of expansion—and velocity. If you will refer to a most interesting paper by Mr. Strype in the seventh volume of our Transactions, you will see the influence of the inertia of the reciprocating parts of steam engines on their motions demonstrated mathema-

tically as well as practically; and if engines were constructed with this consideration in view there is no reason why considerable speed should not be compatible with smoothness of motion. I fear, however, that few engineers trouble themselves about such niceties. The grade of expansion of engines is varied without regard to the proportions of the engine, the ready cure for rough running being a little more or less lead; a contrivance, in fact, to correct in a wasteful way the evil consequences Mr. Strype has shown must arise from improper relations between the mass of moving parts and the energy of steam. Wide differences of opinion exist as to the most advantageous pressure to use. I do not think there is much gained beyond 60 lb. above the atmosphere, because the advantages of increased expansion are counteracted by the increased loss by radiation from the more highly heated parts, by the increased temperature of the smoke leaving the boiler, and by the practical difficulties of lubrication and the wear of parts. Much misconception exists about "superheated steam." There is no advantage in using really dry steam at a higher temperature than that due to its pressure. But steam never issues from a boiler dry; it carries up with it mechanically more or less water, and is itself partially condensed by radiation and conduction. Extra heat applied to vaporize this water is a direct gain, but any heat beyond that is much better applied to the water in the boiler.

I must direct your attention for a few minutes to the very beautiful invention of a man who has contributed materially to the advancement of mechanical science. I allude to the chronometric governor of Mr. Siemens. The principle upon which this instrument is constructed is to establish uniform rotation by the mutual action of power and resistance, both of which shall be invariable, and to obtain the force necessary for regulation from the resistance which such revolving body is

made to offer to the least change of speed. The general arrangement of the governor is this: a vertical spindle carries on its upper end a cup having an open bottom, and revolving in a cistern of water or other fluid, the bottom of the cup being sufficiently immersed in the water to allow of the latter being raised by the action of centrifugal force, and thrown over the margin of the cup. The cup is not fixed rigidly to the spindle, but is connected to it either by a spiral spring or constant weight, so that variations in the speed of the spindle have the effect either of altering the immersion of the cup, and thus causing it to raise more or less water, and so absorb or yield up power, or the altered speed affects the weight, which, by its motion, regulates the admission of steam or water.

The first form of governor is applicable to delicate work, and directly compensates for variations in the motive force by raising more or less of the fluid the cup is immersed in. It has been applied successfully to the regulation of electrical clocks, telegraph recording instruments, equatorial telescopes, and the like.

The second form of governor is adapted to heavy machinery, such as steam engines, water wheels, marine engines, where it would be impracticable as well as wasteful to attempt the absorption of excessive power; and when, therefore, the cup is driven by the prime mover to be regulated through the agency of differential wheels, the disc containing the intermediate pinions being kept in position by a weight or spring. The constant resistance at a uniform speed that the fluid offers in rising in the cup, augmented by the overflowing portion striking projecting vanes in the fixed case, and on the outside of the cup serves to sustain the weight which thus becomes the fixed driving power of the cup. The least tendency to variation of speed produces a greater or less discharge of fluid, and therefore a corresponding alteration of

the resistance to the power necessary to drive the cup, and a consequent movement in the weight, which being communicated to the regulator, adjusts the speed of the prime mover. Unlike the pendulum governor, the instrument I have described, once set to a certain speed will maintain it quite independently of the amount of force exerted; and so perfect is the action that a steam engine may be loaded to its full power, and then suddenly and completely relieved without any sensible change of velocity. The chronometric governor does not require to be kept in a vertical position; the action continues perfect so long as the lower orifice of the cup remains immersed, and hence it is applicable to the regulation of marine engines. Those who wish to be more fully informed of this elegant invention will find all they desire in the paper read by Mr. Siemens before the Institution of Mechanical Engineers of Birmingham, in January, 1866.

Mr. Siemens is the author of another invention of wide-spread utility—the regenerative gas furnace. This furnace consists of two portions: 1st, The producer where the gas is made, and which may be at any point of an establishment most conveniently situated for the supply of fuel; and, 2nd, the furnace with its regenerators connected to the producer and chimney by subterranean flues.

The gas producer is not unlike a covered limekiln with a firegrate at the bottom. Into this the fuel is thrown. The layers next the bars burn in the ordinary manner, the heat of combustion driving off the light hydrocarbon gasses from the fresh fuel while the carbonic acid produced at the grate in passing through the mass of red-hot fuel, takes up another equivalent of carbon, and is changed into carbonic oxide, which is an inflammable gas; and lastly, to diminish the quantity of nitrogen steam is introduced at the grate, and, becoming decomposed by the incandescent coal, to a certain extent takes the place of air, but with the advantage of yielding hydrogen

instead of nitrogen. The mixture of gasses I have named collect in the upper part of the producer, and are carried up about 10 feet in a brick stack, then horizontally a short distance, and down again in sheet iron flues into the main gas passage to the furnaces. The gas passing through the sheet-iron flues becomes slightly cooled, and its density sufficiently increased to make this system of pipes act like an air syphon, and impel the gas along the mains.

The furnace is made of various forms to suit particular purposes, but in all cases it is provided with regenerators consisting of two pairs of chambers filled with loose bricks and fitted with valves, so that the gas and the air necessary to mix with it are brought up one pair of chambers into the furnace, burn, and the waste heat and products of combustion pass down the second pair to the chimney flue. In the course of an hour the second pair of regenerators have become intensely hot at their upper ends, the gas and air valves are reversed, the flames descend by the first pair of regenerators, while the air and gas rise by the second, absorbing the heat from the loose bricks, among which they find their way into the furnace, and thus commence to burn at a high temperature, effecting a great economy, the heat of the chimney flues being only about 300 degrees.

The hearth of the furnace is neutral as regards draught; the gas and air enter by their own buoyancy; the draught of the chimney is regulated so as merely to carry off the products as they are formed, and, consequently, when the furnace door is opened there is no indraught of air and consequent oxydation of the metal being heated. By varying the proportions of gas and air the flame may have oxydizing or deoxydizing properties communicated to it; an absolutely uniform heat may be kept up for any length of time; the producers are self-regulating, because the amount of air passing into the grate, and therefore the quantity of gas produced

depends upon the quantity drawn off; and, finally, one attendant can easily manage three or four furnaces. Almost any sort of fuel can be used, slack and screenings of coal and coke being as good as any, and considerably cheaper. From several years' experience I can say that not only are Siemens' furnaces theoretically an improvement on the old system, but that they answer perfectly in practice, and will, I think, be very valuable with fuel, such as peat, that cannot bear a strong blast, but which in other respects presents special advantages for metallurgic operations.

In the manufacture of iron and steel Mr. John Ramsbottom, of the Crewe works, has introduced some valuable improvements. In the ordinary process of rolling iron the bars are passed through in one direction only, returning over the top roll, whereby much time is lost and heat wasted. The geering by which rolling mills are driven is usually of an extremely ponderous description, and though the idea of reversing the rolls and passing the iron backwards and forwards has often been entertained, the difficulty of arranging the mechanical details has stood in the way of its adoption. Mr. Ramsbottom, with the originality which characterizes most of his proceedings, boldly discarded the old system, and applied a pair of high pressure engines without any fly wheel whatever, direct to the rolls, and obtained the desired action by reversing the engines so perfectly that the whole train of rolls at Crewe has been reversed as often as seventy-three times in one minute.

The engines of the Crewe rolling mill have cylinders 28″ diam., 4′ stroke, coupled at right angles, and geered into the rolls so as to make $3\frac{1}{4}$ revolutions more than they do. The reversing arrangement is a modification of Allen's straight-link motion, which, for convenience, is worked by hydraulic power. There are two pairs of rolls, one for roughing down, and one for finishing; the former is

24 inches diameter and 6 feet long, the other the same diameter, but 7 feet long, the connexion between the engine and the rolls being through a friction clutch. The practical working of these rolls has proved eminently satisfactory, nor does the quality of the iron appear to be affected by being rolled alternately in opposite directions. The introduction of this system will very much facilitate the production of very long bars and heavy plates.

In the manufacture of steel tyres Mr. Ramsbottom has again quite left the beaten track. To make a five-foot locomotive wheel tyre, he first casts a Bessemer steel truncated cone 22″ diam. at the base, 6″ at the apex, and 22″ high. As soon as sufficiently set it is removed from the mould, reheated and hammered on the sides and end in a steam hammer of perfectly original construction. It works horizontally, and instead of an anvil it is opposed by a second hammer working simultaneously in the opposite direction. By this bold arrangement perfect uniformity of blow on the two faces is obtained; the ordinary hammer, it is well known, producing a greater effect on the hammer than on the anvil side, especially in large masses. The bloom which the horizontal duplex hammer has reduced to the form of a cheese 22″ diam. and 9″ thick is heated a second time, and then placed under a steam hammer having a cone 17″ long and 12″ diam. fixed to its face, by means of which a hole is punched through and enlarged, till it is 12″ diam. The ring is then heated a third time, and hammered upon a beak anvil at an inclination of 20° to the vertical, till it is 34″ diam. and 5⅜″ thick, after which it is heated for the last time, and finished in Mr. Rothwell Jackson's circular rolling mill. At the works of the London and North Western Railway Company, at Crewe, Mr. Ramsbottom's system is in full operation, the tyres being turned out by one set of apparatus at about the rate of one every hour, with great economy,

chiefly on account of the very insignificant waste of material, not exceeding 8 per cent., and the small number of reheatings, while the searching work every tyre has to undergo is a guarantee of its soundness.

I now approach a subject of peculiarly national importance, but which I fear will find little favour in your eyes. I mean, the artificial drying and consolidation of Peat. I dare say, many will exclaim that there have been quite failures enough of attempts to give our bogs a high commercial value to justify the conclusion that so desirable an end is beyond our reach, and that it is mere waste to devote time and money to it. To such objections I would reply that repeated failures by no means prove that an enterprise is impracticable, that on the contrary they should be made stepping-stones by which men of talent and perseverance can rise to the goal they have determined to attain; that in difficult undertakings the failures that have arisen are like buoys laid down by our predecessors to warn us of the rocks on which they have made shipwreck, and that consequently the course of each succeeding adventurer is the more clear and secure. Those who care to take the trouble to study the history of peat-fuel manufacture, and who will patiently ascertain the cause of each failure, will, I think, agree with me that the following points have at least been determined:—

1. That the climate of Ireland is very ill adapted to natural drying; that the number of fine days does not, on an average, exceed 100 in the year, and that it is very rare to have many fine days in succession. It is therefore imperative in air drying to expose the greatest possible surface and to accomplish the process in the least possible time.

2. That every ton of peat in an average bog is associated with 9 tons of water; that this water can only partially be separated by mechanical means, and cannot be evaporated naturally when the peat is in the form of sods, in less time than

an average fine summer; that not unfrequently the seasons are so wet that dry turf cannot be procured at all, and that consequently any manufacture depending on it could not be prosecuted.

3. That the cost of cutting and saving turf by the ordinary process increases rapidly with the yield required from a given area, because of the immense surface necessary for spreading out the sods to dry. To cut a moderate quantity of turf from a bank and throw it up to be spread by an assistant is, no doubt, a cheap process, but when a certain width is covered the assistant has to be supplimented by two others with barrows, who at once double the cost, which, after a time, must be increased in a still higher ratio if further width of spreading is required.

4. That peat cannot be compressed in the wet state and dried afterwards, and still form a compact and durable fuel, because a cake of wet peat is in the worst possible condition for drying, and when dry, it becomes porous and friable in proportion to the quantity of water removed.

What then is wanted to hold out a reasonable prospect of success is a process by which a crop of peat could be collected and partially dried in the course of a single fine day, or even a portion of one; an economical means of completing the drying, and a machine competent to compress the dried peat into a compact form.

If you will refer to Vol. vii. of our Transactions, and to the Record of the Proceedings of the Mechanical Engineers of Birmingham in August, 1865, at their meeting in Dublin, you will find a minute description of a process of manufacture which complies with the conditions I have just named, which has been in actual operation for some years, and by which over 7,000 tons of excellent fuel has been produced at a very moderate cost, but which, unfortunately, and for reasons which I will presently explain, is not at this moment in operation.

I will first, however, give the salient points of Mr. Charles Hodgson's beautiful and simple process, pausing for a moment to pay a tribute to the ingenuity and perseverance of our Associate, who for more than ten years devoted the best part of his time, his fortune, and his talents, to the question before us, and whose name will one day be recorded among the benefactors of his country.

The first dawn of success became apparent in the invention of the continuous tube-pressing machine. Mr. Hodgson found that to make a permanent cake of fuel out of dry peat required not only very heavy pressure, but that the pressure should be kept on not less than one minute. No sort of moulding machine could turn out any quantity under these conditions until the happy idea occurred to obtain the necessary resistance to pressure in the friction of a tube, and he embodied this principle in his Patent Pressing Machine, which consists of a tube 4″ diam. and 5 feet long, in one end of which a ram reciprocates, and at each stroke produces a cake about 1″ thick, pushing the full of the whole tube of pressed fuel forward to the same amount; and as each cake takes about one minute to traverse the length of the tube, it remains one minute under pressure, and yet the machine produces 60 cakes in that time. This press leaves nothing to be desired, is extremely simple and durable, and has proved itself capable of compressing regularly at the rate of 100 tons per week.

No sooner was the Pressing Machine perfected than it became apparent that no known process could supply dry turf enough to keep it in operation. The raw material was wanted in the state of powder; Mr. Hodgson set himself to ascertain if the bog could not be made to yield it in that state more abundantly than in any other. He soon noticed that in a well-drained piece of bog each ton of the upper surface for an inch or two deep was associated only with three tons of water, and if harrowed up and exposed for a few hours on a fine day

this was reduced to 1½ tons, and the peat or "mull" so dried, if put into heaps, did not again absorb moisture, and if raked slowly over iron plates heated only by the waste steam of the compressing machine, most of the remaining water was driven off, and in fact that by the combustion of 25 tons of compressed fuel power and heat enough could be obtained to dry and compress 75 tons for the market.

The question of supply thus resolved itself into area of bog brought under treatment, and it has been found from experience that eight Irish acres are sufficient to provide, during the fine weather of the summer months only, sufficient material for the production of 5,000 tons of compressed fuel per annum.

In the year 1865 Mr. Cotton and I were requested to examine and report as to the cost of manufacture upon the process I have just described, the experimental works were placed at our disposal for a month, and the conclusion we arrived at was, that the actual production, at the rate of 84 tons per week, cost 6s. 4d. per ton, and the probable cost, at the rate of 400 tons a week, would not exceed 3s. 11½d. per ton—cost of management in both cases excluded. I have taken considerable pains to ascertain from the actual experience of more extended manufacture how far these anticipations have been realized, and I find that the cost will probably be 4s. 2d. per ton on the large production, while the expenses of management and depreciation will amount to 1s. 8d.; or 5s. 10d. in all. And the price realized for the compressed peat has actually been 9s. per ton at the works, and 11s. 6d. on the canal side in Dublin, leaving in each case a profit of 3s. per ton, with apparently an unlimited demand.

It will naturally be asked why, if these statements are correct, did the undertaking collapse like so many of its predecessors? The causes are chiefly the following:—

1. The company started with insufficient capital. In truth,

the general public did not subscribe more than one-sixth the required amount, the inventor's family subscribed twice as much, and this, with one-half the capital only paid up, the works were imprudently commenced in expectation of additional support as they went on; but evil times were already approaching, and when the commercial crisis came the company had to submit to the fate of many other similar enterprises.

2. The time necessary to prepare the bog for collecting the "mull" was not sufficiently considered. It takes fully two years from the time of first opening the drains to the time when the surface is sufficiently dry to be worked to advantage. This time had not expired before the machinery was ready, and hence a sufficient supply of material could not be obtained to keep the presses in full work.

3. Under mistaken ideas of economy the manufacture of the several portions of the plant was confided to various contractors, the company itself making a good deal of the coarser machinery; the consequence was want of undivided responsibility and a great deal of very bad workmanship. It is always safer, especially in new processes, to pay a house of known talent and reputation a handsome sum for what is required, and to fix on it the responsibility of the proper execution of the work, than to attempt to economize by distributing small contracts and practically abolishing all responsibility.

Had a different course been pursued, had the full capital required been collected, had one press with its attendant drying machinery been fixed first and worked till the bog was sufficiently dry to supply another, and had the whole four presses contemplated been thus gradually established, had the machinery been made by one firm of high standing, I am perfectly convinced that a year or two more would have demonstrated that Mr. Hodgson's process of preparing compressed peat was not only the decided mechanical success which it is, but a great commercial triumph as well.

Under present circumstances I see no prospect of the manufacture being resumed, unless the Government could be induced to aid in this truly national work. Its importance as a means of giving constant employment to the people may be estimated from the fact that a production of four tons per week involves the permanent employment of one man, it would cause money to circulate among our own population, instead of paying it away for English coal; it would reclaim large tracts of land from a state of utter unproductiveness, and enable them to bear an industrious population, which would itself then find the means for many of those drainages of which the country stands in great need. I have trespassed long on your patience, but I hope I have made it clear that the subject, at all events, deserves serious consideration, and if ever my hopes and wishes are realized it is to one of our body that the country will be indebted.

In one great branch of our national industry—the cultivation and manufacture of flax—I cannot find that any very marked improvement has recently been introduced. There has been a steady advancement in perfecting details, and notably a great increase in the use of the power loom for linen fabrics. I cannot, however, resist alluding to the very honourable position Mr. James Comb, of the Falls Foundry, Belfast, has achieved as a maker of flax machinery; not only does he successfully compete in the Home Market, but is able to find work for his 1,200 men in England, Scotland, the Continent of Europe, and in fact wherever linen machinery is required.

Iron shipbuilding also appears to have taken firm root in Ireland; the yards of Belfast, Drogheda, Dublin, Waterford, and Cork, have shown themselves quite equal to the largest and best class of work, and Dublin has quite recently added the construction of marine engines to its industries. The honour of this introduction belongs to Mr. Bailey, one of our

members, and my successor in the old house of Courtney, Stephens and Co., and I see no reason why, as the port accommodation of Dublin is improved, its ironworks should not assume a very prominent position in the kingdom. A very large proportion of the work that keeps the Ironworks of England, Scotland, and Wales employed, is exported to our Colonies, and for works the expenditure on which is guaranteed by Government. Ireland, I fear, will not be able fairly to compete in this trade until the largest class of ships sail from her ports direct to India, Australia, and other distant lands, because the cost of delivery and shipment in Liverpool or Glasgow opposes an almost insurmountable bar in open competition. I observe, therefore, with pleasure, the important works carried on by the Ballast Board under Mr. Stoney's direction, for deepening the water along the North Wall, and I trust that more extended and comprehensive plans still will be adopted to forestall the rapidly growing wants of the port, and tempt merchants, ship owners, and contractors to seek in Ireland the manufactured goods they require.

The dredging of the port is being carried on with very great vigour, and I am informed that the introduction of hopper barges capable of containing from 800 to 1,000 tons of dredged material, and being towed by steam power some eight miles out to sea to be emptied, has effected a saving of about £20,000 a year, besides enabling the work to be carried on with much greater rapidity. Our Honorary Secretary, too, has further contributed to his own reputation and to the laurels of this Institution by the publication of a very valuable work "On Strains." We have all known his predilection for that branch of analysis, and from time to time have had specimens of the investigations he has carried on, but we now have a complete work, which, I am sure, will find a place in every Engineer's library.

The conditions of the streets of Dublin has somewhat

unpleasantly reminded me of the recent introduction of steam road rollers for consolidating macadamized and other roads. Several experiments have lately been made by the Government in Hyde Park, London, and there can no longer be any doubt of the vast improvement it is, to subject newly laid-down roads to the action of heavy pressure before any traffic is permitted to go over them.

The best Steam Road Roller is, I believe, that manufactured by Messrs. Aveling and Porter, the Traction Engine makers of Rochester; it is very like an ordinary Traction Engine upon three very wide wheels, the two leading ones, being also the driving wheels, are 7 feet diameter and 2′ 6″ wide, measuring 8 feet over all; the third, or trailing wheel, by which also the steering is effected, is of the same diameter, and so wide as to overlap the tracks of the two other wheels. The general arrangement is based upon the patent of Mr. W. Clark, Engineer to the Justices of Calcutta, and has proved itself most efficient, from the facility with which the roller steers going either backwards or forwards, so that a short piece of new road laid down in the day time can be perfectly rolled down during the succeeding night without any loss of time or power in frequent turnings. The cost of a roller weighing 20 tons is only £600. Liverpool has already adopted the improved system, and it is evident that many other towns, among which I hope Dublin will soon rank, will follow its example.

Within the last few years steam ploughing has taken its place among the acknowledged triumphs of mechanics, although years must elapse before it will come into general use. In cultivating by steam power the land can be ploughed to a greater depth, and more thoroughly thrown up and disintegrated than is possible by horse ploughing, and it can be got over more rapidly, from 5 to 9 acres a day being the work of one set of tackle, and in heavy ground the evil

consequences of trampling by the horses' feet is avoided, and the work therefore rendered less costly. The force of this latter advantage will become apparent when we consider that four horses drawing a plough make 300,000 footprints to the acre, which amounts, in fact, to rolling the land with a weight of 1½ tons per square foot before commencing to break it up. It has taken many years, much ingenuity and money to bring steam cultivation to its present state, and the agricultural community is chiefly indebted to the late Mr. John Fowler and to Mr. Howard for the results obtained.

Three methods of ploughing are in vogue:—1. The steam engine is placed on one side of a field, round which a wire rope is carried and attached to the cultivator at the side farthest from the engine. The rope passes one quarter round two fixed and two movable pullies, and draws the implement backwards and forwards abreast of the engine, the furrows approaching it at every turn. To avoid the great length of rope necessary to go all round the field, it is sometimes led diagonally to the movable pullies, dispensing thus with the fixed corner pullies and saving about one-fourth the rope and attendant rope porters.

2. The engine travels along the headland at right angles to the cultivator, and actuates it either by an endless rope carried round a movable pulley on the opposite headland, or by a rope the ends of which are coiled on drums fixed to the engine, and which alternately pay out and wind it in, the bight being round the movable pulley.

3. Two engines travel abreast of each other on the opposite headlands, and draw the cultivator backwards and forwards between them, either by an endless rope, in which case both engines exert their power on the plough simultaneously, or by a single rope, which is alternately wound in and paid out by drums fixed to the engines.

Two relative advantages of these systems depend on

circumstances. The first has the merit of extreme cheapness and simplicity, the special plant required being merely a windlass, guide pullies, rope porter, plough and rope, any ordinary portable steam engine being available for driving. The complete apparatus costs about £600.

The second system involves the use of an engine specially constructed for the purpose, but in other respects is very convenient, and the cost not more than £800. The third system is the most simple, most quickly got into operation, and capable of getting through the most work in a given time; but, on account of requiring two engines of special construction, it is also the most expensive, the cost of a complete set being about £1,300.

Great difficulty was at first experienced in procuring wire rope strong and tough enough to stand the strain and repeated bendings round the drums. This difficulty has been so far vanquished that a steel rope $\frac{1}{16}$ diameter will cultivate under a strain of 35 cwt. from 1,000 to 2,000 acres of land, the cost of maintaining it not exceeding 6d. per acre ploughed.

The method of transmitting the power of the engine to the rope was beset with many obstacles. According to one plan it is wound on and off two drums, which necessitates the use of a larger quantity of rope than will suffice to cover the ground, and the folds or coils on the drum, unless well laid, tend to squeeze and injure each other. To avoid these evils endless ropes have been introduced, and the power communicated to them through the agency of pairs of grooved pullies, geered together, round which the rope is passed several times; but the grooves wear irregularly, and surging destructive to the rope takes place. This difficulty appears to have been overcome by the ingenious device known as Fowler's "clip drum," which consists of a number of clips set round the perifery of a large pulley, and so arranged that they close upon the rope in proportion to its pressure, so that any amount of

grip can be obtained without excessive straining or frequent bending.

One other difficulty attends the endless rope system, and that is the necessity of providing for the variable width of fields—a variation, too, that takes place more or less at every advance of the engines. This has been happily met by Fowler's "slack geer," a self-regulating arrangement attached to the cultivator, and which consists of a pair of drums, on which the ends of the rope are coiled, and which are mutually connected by pitched chains, so that the hauling strain coming on the rope on one drum causes it to unwind, and in so doing, through the pitched chain, makes the other drum turn five times as much, and so wind up the slack, which operation must have reached a given degree of intensity before the plough begins to move, ensuring thus the necessary tightness of the rope.

In spite of the advantages of the endless rope, the winding system will probably meet with most favour, because it requires less machinery, and is therefore less likely to get out of order.

There can be no doubt that steam cultivation, especially for heavy lands, is practically and commercially successful; it can be applied advantageously to fields of twenty acres and upwards, a breadth of from 300 to 400 yards answering best. The total repairs do not amount to more than 10 per cent. per annum, and the labour, compared with the breadth of land ploughed, is very small.

Owners of steam ploughs contract to cultivate to a depth not to be attained by horse power for 20s. an acre, and make a handsome profit out of the work. I may mention that Fowler's clip drum is excellently adapted to working railway inclines, travelling cranes, mines, &c.

JOHN FALCONER, Printer, 53, Upper Sackville-street, Dublin.

Fig: 5.

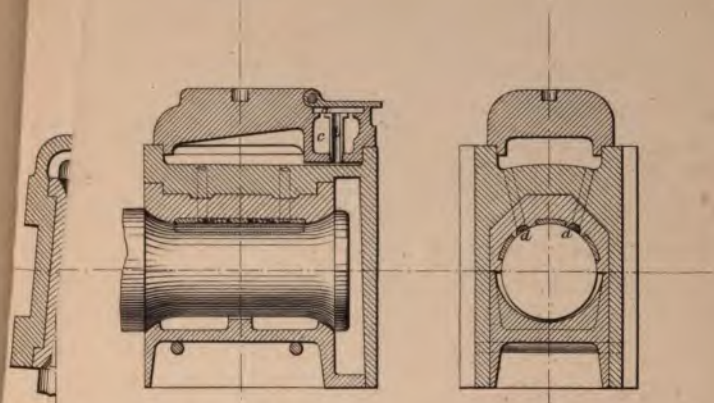

CTIOPLAN. SECTIONAL ELEVATION. CROSS SECTION.

Fig: 6.

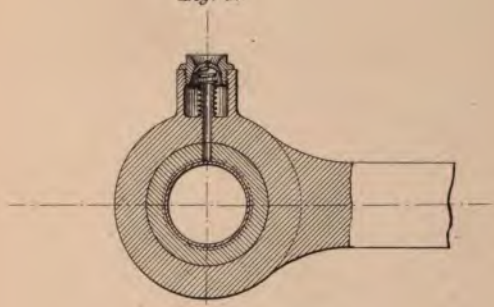

SECTIONAL ELEVATION.

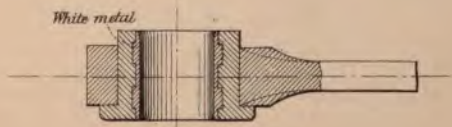

SECTIONAL PLAN.

Kell. Bros. Lith.rs Castle St. Holborn, London.

PUBLIC LIBRARY
ASTOR, LENOX AND TILDEN FOUNDATIONS

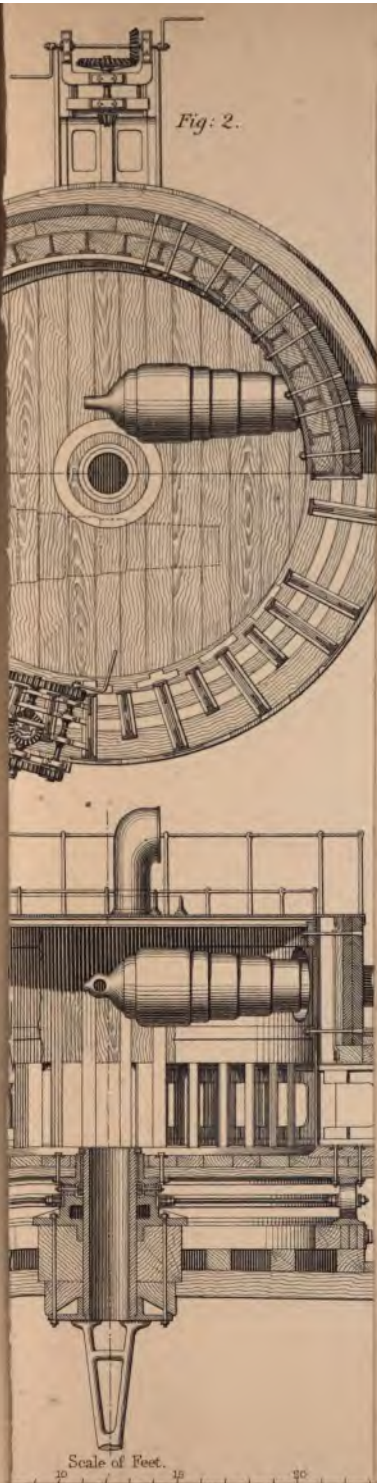
Fig: 2.
Scale of Feet.
10
15
20

NOX AND
UNDATIONS
L

Fig: 5.

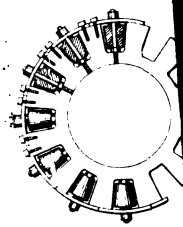

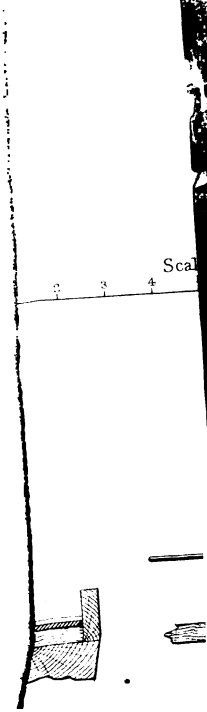

THE NEW YORK
PUBLIC LIBRARY
ASTOR, LENOX AND TILDEN
FOUNDATIONS

Fig: 5.

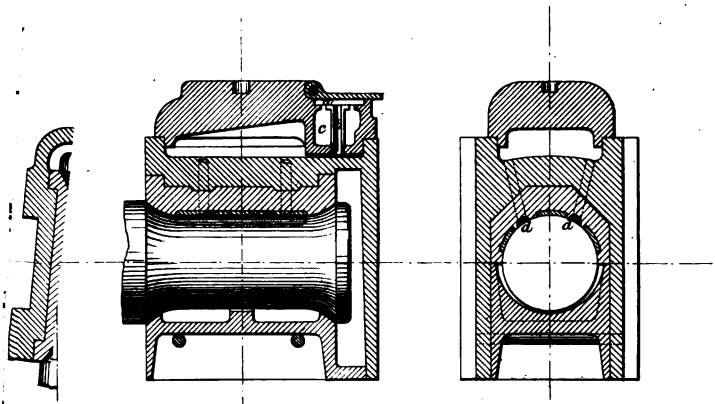

CTIOPLAN. SECTIONAL ELEVATION. CROSS SECTION.

Fig: 6.

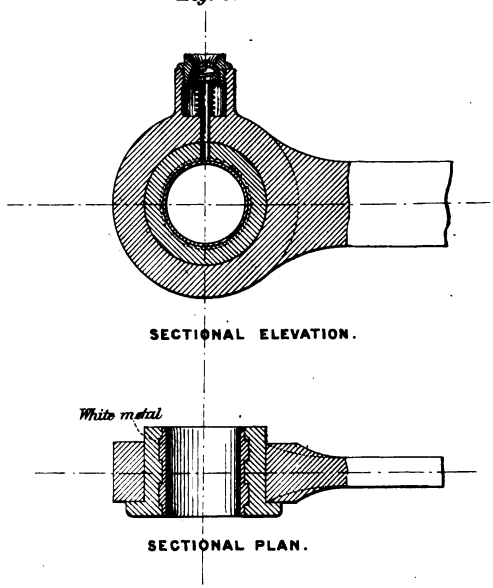

SECTIONAL ELEVATION.

SECTIONAL PLAN.

Kell, Bro.s Lith.rs Castle St. Holborn, Lond—

NEW YORK
PUBLIC LIBRARY
ASTOR, LENOX AND
TILDEN FOUNDATIONS
R L

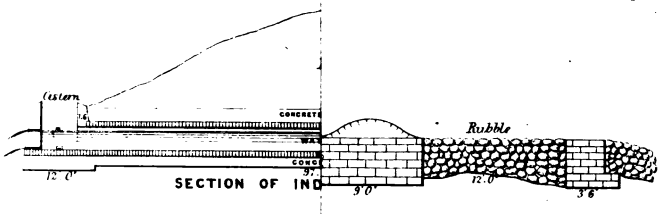

SECTION OF IND

R A LARGE TANK.

INCH.

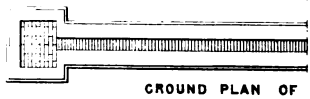

GROUND PLAN OF

Fig: 11

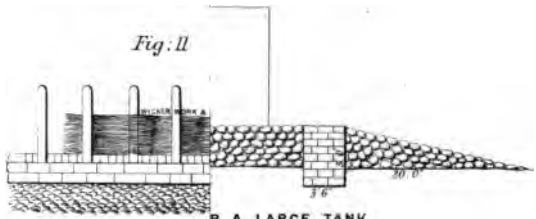

R A LARGE TANK.

ORDINARY NATIVE WAS
LONGITUDINAL SECT

Fig: 12

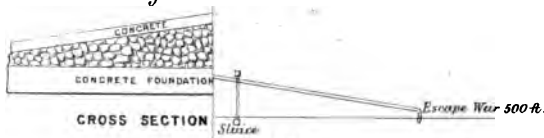

CROSS SECTION

OR TANK.

Fig: 13

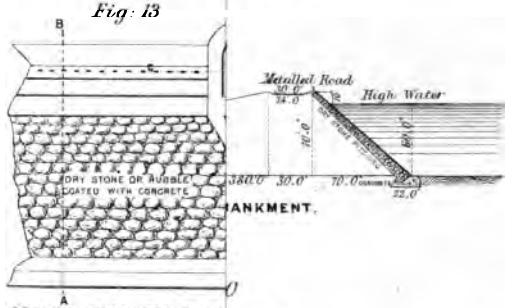

ANKMENT.

GROUND PLAN FOR A LA

Fig: 15

SECTION THROU TANK CONSTRUCTORS.

FIG. 13

Kell Bro^s. Lith^rs. Castle St. Holborn London.

NEW YORK
ARY
AND
ATIONS

TWEN

10

THE NEW YORK
PUBLIC LIBRARY

ASTOR, LENOX AND
TILDEN FOUNDATIONS
L

CONTENTS.

PAGE

On Some of the Materials used for Construction in Madras Presidency. By T. H. Going, F.L.M., ... 103

Description of Oil Axle-box and Outside Coupling Rod for Locomotives, with the Bearings Formed in Single Rings. By A. M'Donnell, Member, ... 114

A New Method of Finding the Angles between the Face Joints and Coursing Spirals on the Soffit in a Skew Arch. By Edward Townsend, M.A., Professor of Civil Engineering, Queen's College, Galway, ... 116

Description of Captain Coles' (R.N.,) Turrets, as Fitted on Board H.M. Ship "Royal Sovereign." By J. Bailey, Member, 118

On the System of Tank Irrigation in Southern India, and the Principles of Native Construction of Earthen Dams, Sluices, and Escape Weirs. By Colonel Meadows Taylor, . 125

Description of a 20 ton Crane, 60 feet high, 31′ 6″ sweep. By W. Anderson, President. 167

Address. By W. Anderson, President, ... 173

N.B.—Members are requested to observe that there will be no second issue of this Part of Vol. VIII., which should, therefore, be preserved for binding with the First Part already issued.

JUN 8 1937